Installation, Operation and Maintenance Manual
DOC.IOM.BE.EN Rev. 9
March 2019

Bettis RPE-Series

Rack and Pinion Pneumatic Actuators

BETTIS™

EMERSON™

Table of Contents

Section 1: Before You Start

1.1 Installation, Operation and Maintenance Reference Documents 1
1.2 Warehouse Storage 1
1.3 On-Site Storage 2

Section 2: Introduction

2.1 Identification 3
2.2 Intended Use 5
2.3 Specifications 5

Section 3: Configuration Code

Section 4: Installation

4.1 Before You Start 9
4.2 Actuator Rotation Direction 9
4.2.1 Valve Rotation 9
4.2.2 Position After Failure 10
4.3 Principles of Operation 10
4.3.1 Solenoid Valve 10
4.3.2 Ingress Protection (IP) rating 11
4.3.3 Double-Acting Actuators 12
4.3.4 Spring-Return Actuators 13
4.4 Actuator Assembly Codes 14
4.5 Actuator to Valve Installation 15
4.6 Mounting of control and feedback accessories 18
4.7 Recommended Tubing Sizes 18

Section 5: Mechanical Stroke Adjustment

5.1 Travel Stop Adjustment 20
5.1.1 Double-Acting Actuators 20
5.1.2 Spring-Return Actuators 20
5.1.3 Angular Displacement 21

Section 6: Maintenance

6.1 Normal Maintenance 22
6.2 Inspection and Repair 23
6.2.1 Service Kits 23
6.2.2 Spring-Return Actuator 23

Section 7: Decommission (Out of Service)

7.1 Before You Start 24
7.2 Removing the actuator from the valve 25

Section 8: Disassembly

8.1 Removing End Caps (Sizes 25 to 600) ... 27
8.2 Removing End Caps (Sizes 950 to 4000) ... 29
8.3 Removing Spring Cartridges or Springs ... 30
8.4 Removing of Limit Stop ... 31
8.5 Removing Pistons ... 31
8.6 Removing Pinion ... 32
8.7 Cleaning the Components ... 33

Section 9: Reassembly

9.1 Grease Instructions ... 35
9.2 Reassembly of the pinion ... 36
9.3 Reassembly of the pistons ... 37
9.4 Reassembly and settings of the limit stops ... 39
9.5 Reassembly of the end caps ... 40
9.5.1 Double-Acting actuators ... 40
9.5.2 Spring-Return actuators ... 41
9.5.3 Spring-Return actuators - Size 950 to 4000 ... 42
9.6 Basic function and Air Leak Test ... 45

Section 10: Troubleshooting

10.1 Mechanical Problems ... 46
10.2 Pneumatic Problems ... 47
10.3 Electrical Problems ... 48

Section 11: Parts List and Spare Parts Recommendations

11.1 Actuator sizes RPE25 to RPE600 ... 49
11.2 Actuator sizes RPE950 to RPE2500 ... 50
11.3 Actuator size RPE4000 ... 51

Appendix A: Spring Load Removal

A.1 Spring load relief ... 52

Appendix B: Tool & Torque Table

Appendix C: Full Stroke Adjustment Option

C.1 Full Stroke Adjustment Option ... 56
C.2 Convert a Standard Actuator into a Full Stroke Adjustment Version ... 57
11.3.1 Procedure ... 58
C.3 Full Stroke Adjustment Setting ... 59
11.3.2 Factory Setting Procedure ... 59
11.3.3 Setting the Full Stroke Adjustment Screw to the Required Angle ... 60

Section 1: Before You Start

This section explains:

- Base safety procedures.
- Where to find detailed information relating safety.
- Storage guidelines.

Installation, adjustment, putting into service, use, assembly, disassembly and maintenance of the pneumatic actuator must be performed by qualified personnel.

NOTICE

Failure to follow the above guidelines will void warranty.

⚠ WARNING

Actuator must be isolated both pneumatically and electrically before any (dis)assembly starts. Before mounting or (dis)assembly, the actuator consult the relevant sections of this manual.

1.1 Installation, Operation and Maintenance Reference Documents

Before you start, read the following documents:

- All chapters in this manual.
- Safety Guide (Document No. DOC.SG.BE.1).

For Safety Instrumented Systems application, read the following document:

- SIL Safety Manual Bettis RPE-Series (Document No. DOC.SILM.BE.EN).

NOTICE

Failure to read the Safety Guide will void the warranty.

Not following the instructions of the Safety Guide can lead to failure of the product and harm to personnel or equipment.

1.2 Warehouse Storage

- All actuators should be stored in a clean, dry warehouse, free from excessive vibration and rapid temperature changes.
- All actuators should not be stored directly to the floor surface - it must be placed in racks/shelves or use a pallet.

1.3 On-Site Storage

- All actuators should be stored in a clean, dry warehouse, free from excessive vibration and rapid temperature changes.
- Prevent moisture or dirt from entering the actuator. Plug or seal both air connection ports.

NOTICE

Failure to follow the above guidelines (Warehouse and On Site Storages) will void warranty.

Section 2: Introduction

This section explains:

- How to identify the received product.
- The intended use of the product.
- Construction details.
- Actuator specifications.

2.1 Identification

The Bettis™ RPE-Series Rack and Pinion actuators are available as double-acting or spring-return versions. 12 models are available, ranging from 23 Nm to 4041 Nm (206 to 35765 lbf.in)nominal torque output.

The Bettis RPE-Series uses standardized interfaces for solenoid, switchbox or positioner mounting (VDI/VDE3845; NAMUR). The valve interface is equipped with an insert in the pinion bottom that allows both ISO5211 or DIN3337 mounting.

The springs in the spring-return version allow a fail action in case of loss of air supply pressure (Fail-to-Close or Fail-to-Open).

As from size RPED150 double-acting versions have flat end caps to reduce actuator length and internal air volume.

Figure 1 Identification

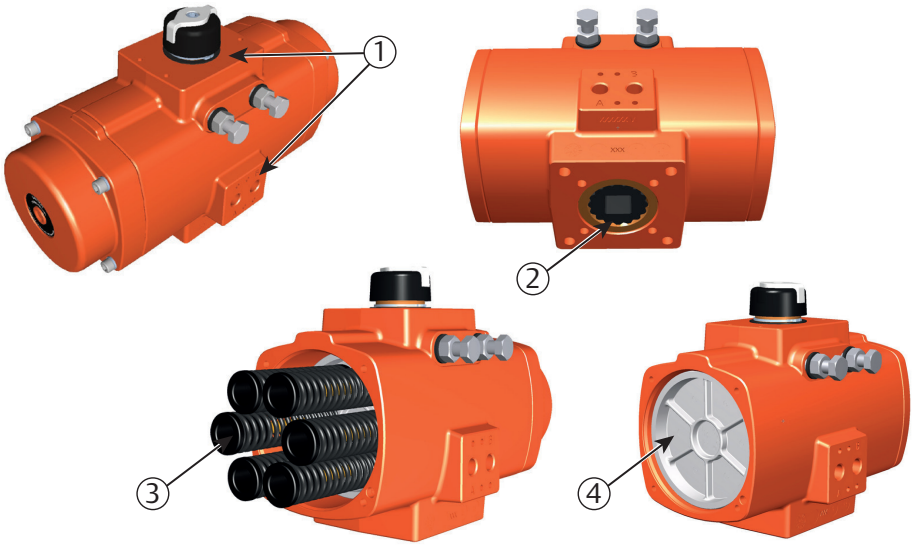

Size	End cap design [5]	Spring design [6]	Pinion bottom / Insert design [2]
25 - 100	SR DA	Left Right Maximum 12 spring cartridges	
150 - 600	SR DA	Left Right Maximum 12 spring cartridges	
950 - 2500	SR DA	Left Right Maximum 6 loose springs	
4000	SR DA	Left Right Maximum 6 loose springs	

Notes
1. Top auxilliaries and Solenoid interface (VDI/VDE 3845; NAMUR) for size 25 to 4000.
2. Valve interface availalable according ISO5211 or DIN 3337.
   Actuator sizes 25 to 2500 can be fitted with drive inserts with various inner shapes.
   Actuator size 4000 is fitted with a double square; parallel and diagonal.
3. Spring-Return actuators: - with springs
4. Double-Acting actuators: - no springs
5. Actuator sizes 25 to 100 have high end caps for double-acting and spring-return models.
   Actuator sizes 150 to 4000 have low end caps for double-acting models and high end caps for spring return models.
6. Actuator sizes 25 to 600 are fitted with a maximum of 12 spring cartridges.
   Actuator sizes 950 to 4000 are fitted with a maximum of of 6 loose springs.

2.2 Intended Use

The Bettis RPE Rack and Pinion actuators are intended for the automation and operation of quarter-turn valves like Butterfly, Ball and Plug valves.

Rack and Pinion actuators can also be used to operate dampers or any other quarter-turn applications.

2.3 Specifications

Table 1. Pressure Range

Actuator Type	Pressure
Double-Acting	0.2 to 8 bar (2.9 to 116 psi)
Spring-Return	6 to 8 bar (87 to 116 psig), with maximum spring set
	3 to 8 bar (43.5 to 116 psig), reduced spring quantity

Table 2. Operating Media

Actuator Type	Operating Media
Double-Acting and Single Acting	Air, dry or lubricated and inert gases
	Dew point at least 10K below ambient temperature
	For sub-zero applications, take appropriate measures
	Mentioned pressure levels are "gauge pressures". Gauge pressure is equal to absolute pressure minus atmospheric pressure.

1. Recommended air quality according ISO 8573-1 for normal operation: 7-5-4.

NOTE:

Use of filters, pressure regulators, lubricator and an oil/water separator mounted in the air supply line, will allow a smooth and durable operation of the actuator.

For lubricated supply air, it is recommended to use a non-detergent oil without aggressive additives, VG32, group 2 (ISO 3448).

Table 3. Temperature Range

Actuator Type	Temperature
Standard	-20°C to 80°C (-4°F to +176°F)
Option: Low Temperature	-40°C to +80°C (-40°F to +176°F)
Option: High Temperature	-10°C to +120°C (+14°F to +250°F)

Table 4. Air Volumes and Consumption

Actuator volumes:				Consumption per stoke (in liters, pressure in barg)					
Actuator model	Maximum volume (in liters)			Outward Stroke			Inward Stroke		
	Central[1] chamber	End cap[2] chamber	Displaced[3] volume	Double-Acting and Spring-Return			Double-Acting only		
				2	4	8	2	4	8
RPE 0025	0.14	0.20	0.08	0.36	0.64	1.2	0.48	0.88	1.7
RPE 0040	0.26	0.37	0.15	0.67	1.2	2.2	0.89	1.6	3.1
RPE 0065	0.40	0.56	0.22	1.02	1.8	3.4	1.3	2.4	4.7
RPE 0100	0.6	0.9	0.3	1.5	2.7	5.0	2.0	3.8	7.2
RPE 0150	1.0	0.8	0.5	2.4	4.3	8.1	2.1	3.6	6.7
RPE 0200	1.3	1.0	0.7	3.2	5.7	11	2.8	4.9	9.1
RPE 0350	2.1	1.9	1.2	5.5	9.8	18	5.0	8.8	16
RPE 0600	3.6	3.3	2.1	9.4	17	31	8.7	15	28
RPE 0950	4.9	4.6	3.2	13	23	43	12	22	40
RPE 1600	7.9	7.3	5.4	21	37	69	20	35	64
RPE 2500	12.6	11.9	8.3	34	59	109	32	56	104
RPE 4000	21.7	19.0	13.5	57	100	187	52	89	165

Actuator volumes:				Consumption per stoke (in Cu.in., pressure in psig)					
Actuator model	Maximum volume (Cu.in.)			Outward Stroke			Inward Stroke		
	Central[1] chamber	End cap[2] chamber	Displaced[3] volume	Double-Acting and Spring-Return			Double-Acting only		
				40	80	120	40	80	120
RPE 0025	8.5	12.2	4.7	28	52	75	38	72	106
RPE 0040	15.9	23	8.9	53	96	140	71	133	196
RPE 0065	24	34	13.5	81	148	215	107	200	294
RPE 0100	36	53	19.9	118	216	314	165	310	455
RPE 0150	58	47	32	192	352	512	163	293	424
RPE 0200	76	64	44	255	466	676	220	397	573
RPE 0350	131	115	76	436	796	1157	392	709	1025
RPE 0600	222	201	129	742	1354	1967	683	1237	1790
RPE 0950	301	279	196	1025	1854	2682	966	1735	2505
RPE 1600	484	447	328	1662	2997	4331	1560	2792	4024
RPE 2500	769	728	508	2630	4751	6873	2515	4523	6530
RPE 4000	1324	1159	825	4477	8130	11782	4022	7219	10416

Notes:
1. Pistons at 90° outward position.
2. Pistons at 0° inward position.
3. Stroke is 90°.

Figure 2 Actuator air volumes

Central air chamber volume
Double-Acting and Spring-Return

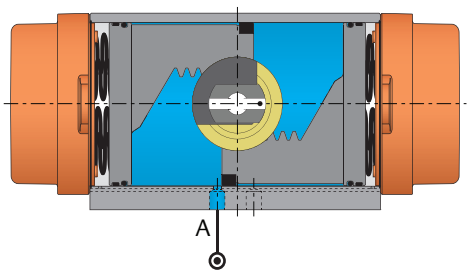

End cap air chamber volume
Double-Acting only

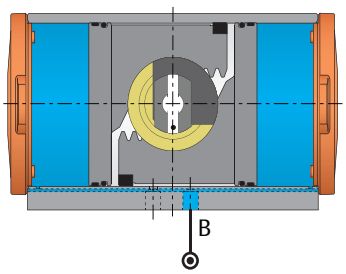

Section 3: Configuration Code

This section explains:

- How to create the configuration code for a actuator.

RPES 0150 - N U 40 CW AL TN - L19 S K A - 00 XX

- Type
- Size
- Rotation angle
- Threads
- Spring set
- Rotation
- Pinion material
- Valve interface
- Valve stem connection
- Temperature
- Visual indicator
- Color / finish
- Internal code 1
- Miscellaneous options

Type	
RPED	Double Acting
RPES	Spring Return

Size			
0025	Size 0025	**0350**	Size 0350
0040	Size 0040	**0600**	Size 0600
0065	Size 0065	**0950**	Size 0950
0100	Size 0100	**1600**	Size 1600
0150	Size 0150	**2500**	Size 2500
0200	Size 0200	**4000**	Size 4000

Rotation angle	
N	90° rotation angle

Threads	
M	Metric ISO 5211
U	UNC/NPT/Imperial

Spring Set			
00	Double Acting (no springs)		
10	Spring Set 10	**40**	Spring Set 40
20	Spring Set 20	**50**	Spring Set 50
30	Spring Set 30	**60**	Spring Set 60

Rotation direction	
CW	Spring to Close/Clock Wise
CC	Spring to Open/Counter Clock Wise

Pinion Material	
AL	High Grade Aluminium, Hard anodized [7]
SS	Stainless steel ASI 316 (+ A4-70 SS fasteners)

Valve Interface [2]	
TN	Standard ISO 5211 interface
SY	Small interface with center plate (DIN3337)
LY	Large interface with center plate (DIN3337)

Valve Stem Connection				
Actuator size	**Square**	**Aluminum**		**Stainless Steel [4]**
		Parallel drive ■	**Diagonal drive ◆**	**Star drive ✹**
No insert		**000**		Not applicable
0025	11mm / 0.433"	**L11**	**D11**	**Q11**
0040 & 0065	14mm / 0.551"	**L14**	**D14**	**Q14**
0100	17mm / 0.669"		**D17**	**Q19**
	19mm / 0.748"	**L19**		
0150	17mm / 0.669"		**D17**	**Q22**
	19mm / 0.748"	**L19**		
0200	22mm / 0.866"	**L22**	**D22**	**Q22**
0350	22mm / 0.866"		**D22**	**Q27**
	27mm / 1.063"	**L27**		
0600	27mm / 1.063"	**L27**	**D27**	**Q27**
0950	36mm / 1.417"	**L36**	**D36**	**Q36**
1600 & 2500	46mm / 1.811"	**L46**	**D46**	**Q46**
4000 [3]	55mm / 2.165"	**Q55**	**Q55**	**Q55**

Temperature Range	
S	Standard: -20°C to +80°C (-4°F to +176°F)
H	High: -10°C to +120°C (+14°F to +250°F)
L	Low: -40°C to +80°C (-40°F to +176°F)

Visual Indication Code	
K	Standard (Knob)
N	No Visual Indication

Finish	
B	Standard coating (Bettis Orange)

Internal code 1	
00	Standard
10	Stainless steel AISI316 (A4-70) end cap screws [7]

Miceleanuous options	
XX	Standard
H1	1/2" High Flow plate
P1	1/2" Porting according EN 15714-3 (only sizes 950-4000)

Notes:
See next page.

Notes:

1. The options, listed here, are all options available. Not all options apply to all configurations.
2. Valve Interface: Option "S"; Small Interface with Center Plate (DIN3337) is not available for size 0025, 0950 and 4000. Option "L"; Large Interface with Center Plate (DIN3337) is not available for size 1600 and 2500.
3. Size 4000 does not have inserts but has two inner squares (diagonally and parallel oriented) directly in the bottom of the pinion.
4. Actuators with stainless steel pinions do not have inserts but have two inner squares (diagonally and parallel oriented aka "Star Drive") directly in the bottom of the pinion.
5. Contact you local Bettis representative for additional insert options.
6. PED Group 1 Label only available up to size 950.
7. Actuators with the default hard anodized pinions, come with stainless steel grade A2 (AISI304) end cap screws.
   Optional, the actuator is available with stainless steel grade A4-70 (AISI316) end cap screws.
   Select option 10 in the "Internal code 1" segment in case stainless steel grade A4 (AISI316) end cap screws are required.

Section 4: Installation

This section explains:

- The actuator rotation direction.
- In which position the actuator will end after a failure.
- Principles of operation:
  - Solenoid operation.
  - Double acting and Spring return operation.
- Assembly codes.
- Actuator to valve assembly.

4.1 Before You Start

SAFETY

In case of an air or electrical failure, it is important to know the behavior of the actuator. Before mounting the actuator on a valve, consult the following sections below.

4.2 Actuator Rotation Direction

4.2.1 Valve Rotation

For the following paragraphs we assume that valves rotate as indicated in figure 3.

Figure 3 Normal valve rotation

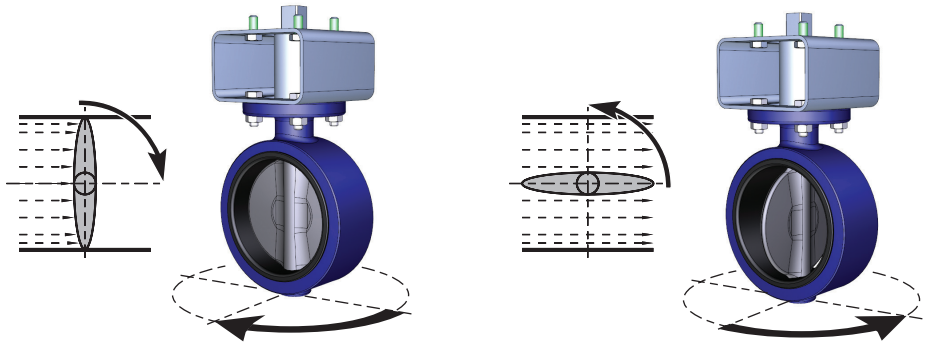

The valve is closed after a clockwise rotation.

The valve is open after a counterclockwise rotation.

4.2.2 Position After Failure

The position of the actuator after a failure depends on the:

1. Principle of operation (see paragraph 4.3)
2. Assembly codes (see paragraph 4.4)
3. Kind of failure. Refer to the table below.

Table 5. Position After Failure

Principle of Operation	Assembly Code	Kind of Failure	Position
Double-Acting Actuator	CW	Pressure	Not defined
		Signal	Closed
		Supply Voltage	Closed
	CC	Pressure	Not defined
		Signal	Open
		Supply Voltage	Open
Single-Acting (Spring-Return) Actuator	CW	Pressure	Closed
		Signal	Closed
		Supply Voltage	Closed
	CC	Pressure	Open
		Signal	Open
		Supply Voltage	Open

4.3 Principles of Operation

4.3.1 Solenoid Valve

All actuators can be either piped with solid or flexible tubing with the solenoid valve mounted remotely from the actuator or by mounting a VDI/VDE 3845 (NAMUR) designed solenoid valve DIRECTLY onto the NAMUR mounting pad on the side of the actuator.

Figure 4 Typical solenoid operation

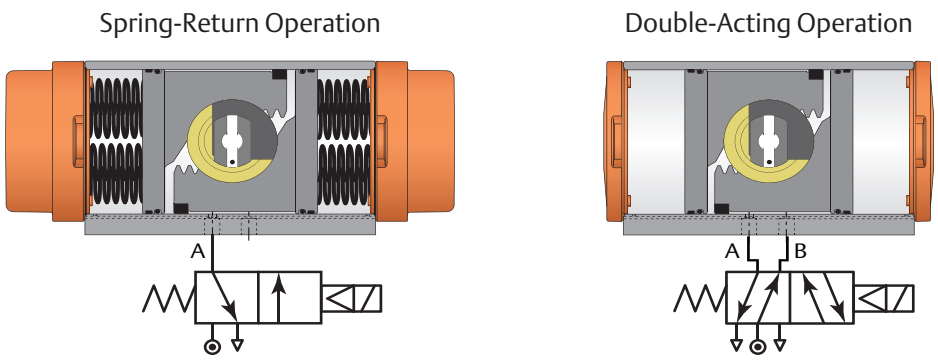

The table below represents the cycle time (operating time) per different Actuator sizes:

Table 6. Operating Speed

Cycle time in seconds				
Actuator size	Spring-Return		Double-Acting	
	A-port pressurized	Spring stroke	A-port pressurized	B-port pressurized
25	0.5	0.4	0.5	0.4
40	0.6	0.5	0.6	0.5
65	0.7	0.5	0.6	0.6
100	0.8	0.6	0.8	0.7
150	1.0	0.8	0.9	0.8
200	1.3	0.9	1.0	1.0
350	1.9	1.3	1.4	1.5
600	3.2	1.9	2.2	2.2
950	6.6	2.2	2.4	2.0
1600	10.6	3.5	3.6	3.3
2500	16.9	5.7	5.8	5.2
4000	29.1	9.2	9.2	9.0

Operating time is average with actuator under load and solenoid valve fitted.

Test conditions:

1. Solenoid with flow capacity:	0.6 m^3/hr
2. Pipe diameter:	6mm
3. Medium:	clean air
4. Supply pressure:	5.5 bar (80psi)
5. Load:	with average load
6. Stroke:	90°
7. Temperature:	Room temperature

4.3.2 Ingress Protection (IP) rating

Bettis RPE actuators are IP66/IP67 rated. In case of IP66 or IP67 requirements, take precautions that comply with the IP66/IP67 requirements to prevent moisture or dust from entering the actuator through the open air exhaust port(s), either directly on the actuator or at the exhaust ports of the connected solenoid valve.

We recommend to connect tubing to the exhaust(s) and lead this into a dry and dust free area, or to use check valves in the exhaust.

4.3.3 Double-Acting Actuators

The operating principle, as explained here, is applicable for actuators with assembly code CW (direct acting).

- Applying supply pressure to port A will move the pistons outward to the "Open" position of the valve.
- Applying supply pressure to port B will move the pistons inward to the "Close" position of the valve.
- For assembly codes CC, the operating principle is reversed (reverse acting).

Figure 5 Double-Acting Operation

Outward Stroke

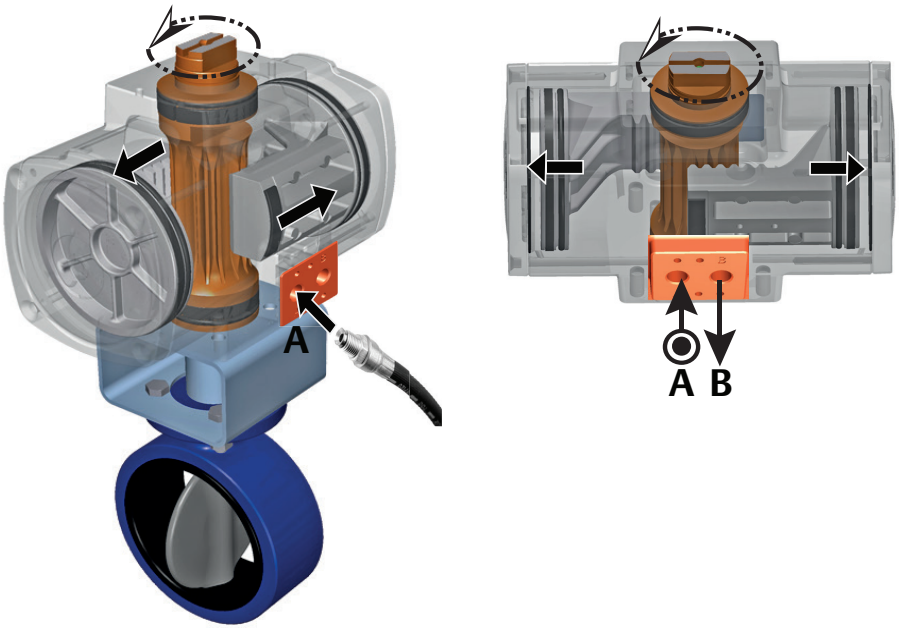

Inward Stroke

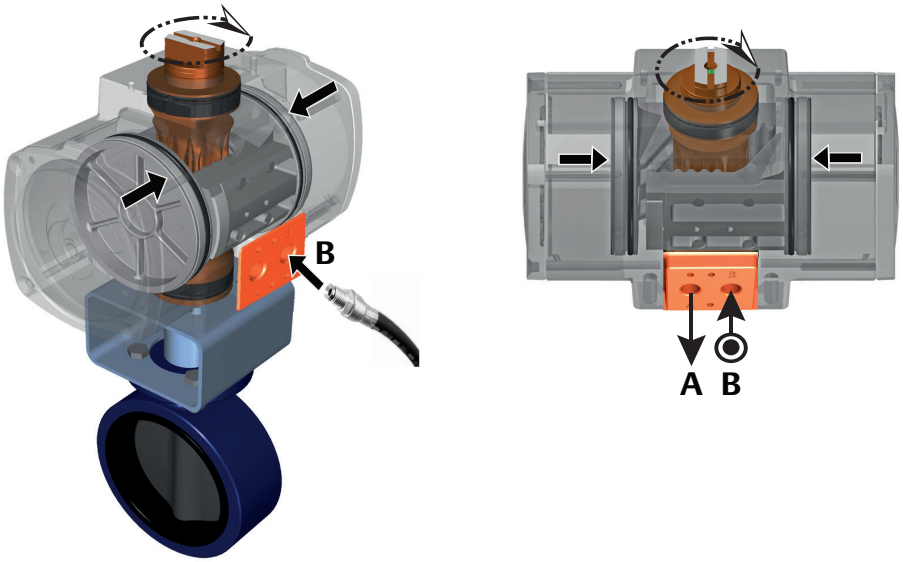

4.3.4 Spring-Return Actuators

The operating principle, as explained here, is applicable for actuators with assembly code CW (direct acting).

- Applying supply pressure to port A will move the pistons outwards to the "Open" position of the valve.
- Venting the supply pressure from port A will cause the springs to move the pistons inwards to the "Close" position of the valve.
- For assembly codes CC, the operating principle is reversed (reverse acting).

Figure 6 Stroke Movements

Outward Stoke

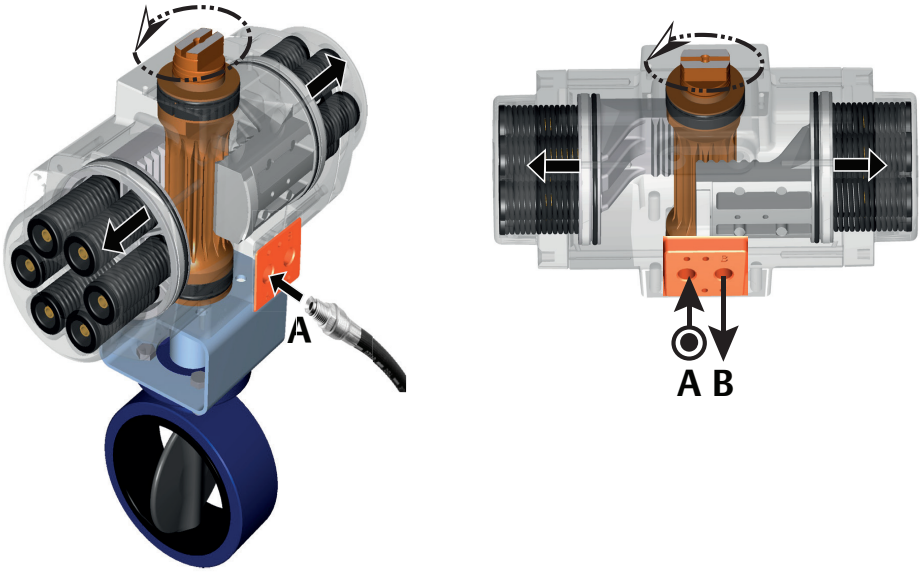

Inward Stroke

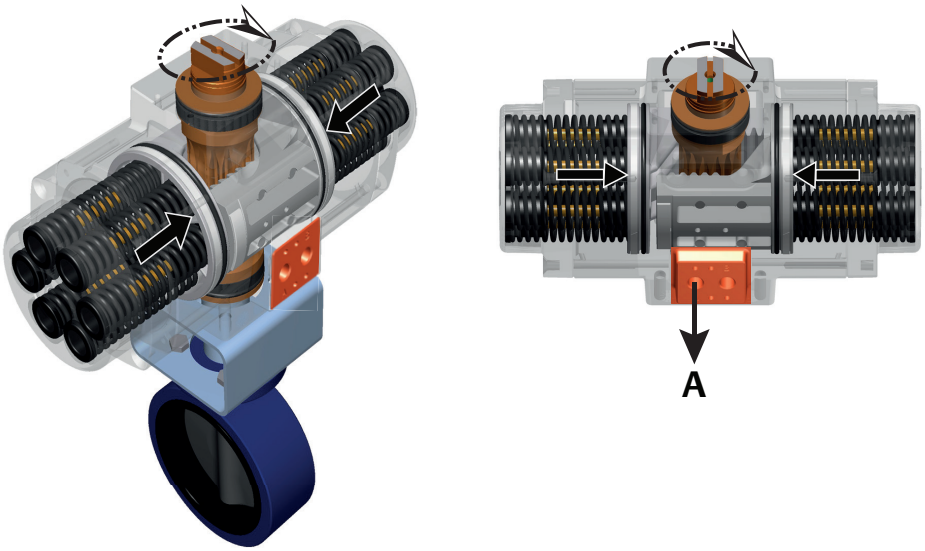

4.4 Actuator Assembly Codes

Figure 7 Assembly Code - Double-Acting

Assembly code: CW

= Standard, Clockwise-to-Close rotation

= Fail-to-Close

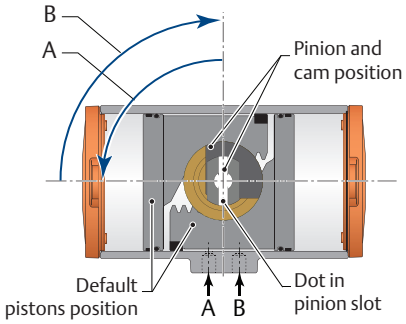

Assembly code: CC

= Reverse, Counterclockwise-to-Open

= Fail-to-Open

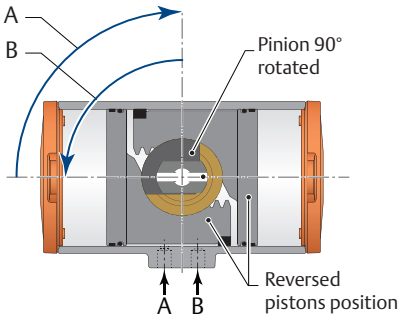

A = Rotation when central air chamber is pressurized.

B = Rotation when end cap air chambers are pressurized.

All views are from above. Pistons are shown in inward position.

Figure 8 Assembly Code - Spring-Return

Assembly code: CW

= Standard, Clockwise-to-Close rotation

= Fail-to-Close

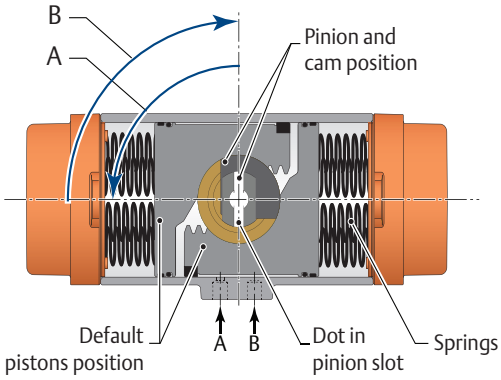

Assembly code: CC

= Reverse, Counterclockwise-to-Open

= Fail-to-Open

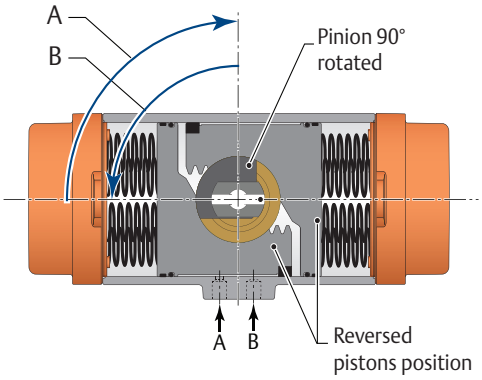

4.5 Actuator to Valve Installation

⚠ WARNING: MOVING PARTS

Actuator must be isolated pneumatically and electrically before any (dis)assembly starts.

Stay away from moving parts to prevent serious injuries. When test cycling the actuator and valve assembly by applying pressure to the A or B port, be aware that there are moving parts like pinion top, actuator to valve coupling and the valve- blade, ball, plug, etc.

NOTICE

The actuator is designed to be installed, commissioned and maintained using generic tools like wrenches, Allen keys and screwdrivers. For the removal of inserts, a special extractor tool can be supplied on request.

During assembly to the valve, do not hit with hammer on pinion top. This can damage the pinion top washer and cause premature failure.

Before mounting the actuator on the valve or valve bracket, be sure that both the actuator and the valve are in the same closed or open position.

Refer to Appendix B, Tool and Torque tables, for using the right size tool.

Table 7. Tool Table

Symbol	Tool	Symbol	Tool
	Wrench – All types and sizes. Metric and Imperial		Allen key
	Circlip Pliers		

1. Remove handle nut, handle, lock washer, and etc. from the valve if required.
2. Visually check to make sure the valve is CLOSED.

Figure 9 Valve handle removal

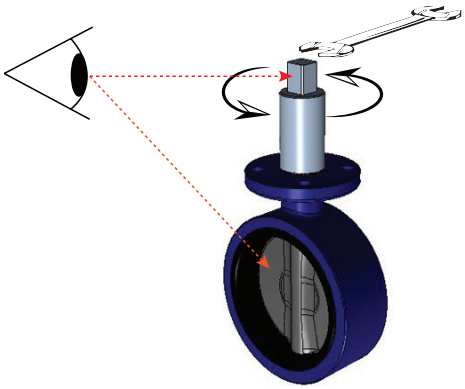

3. When required, check if the insert drive (23) is mounted. If not, use a plasticmallet and tap slightly until the reducer square is in the required position.

Figure 10 Insert drive Installation

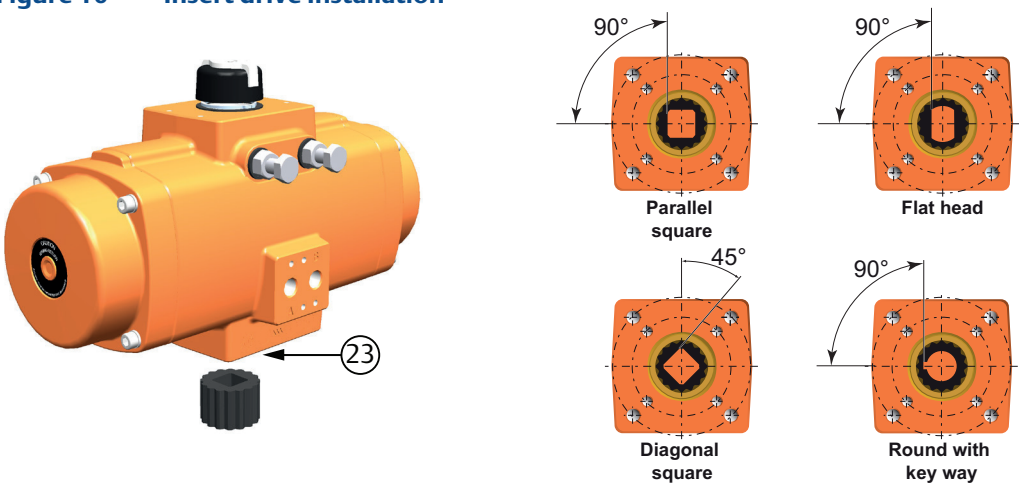

4. Install the bracket to the valve flange. Tighten all bolts and nuts and apply the correct torque.

Figure 11 Bracket Installation

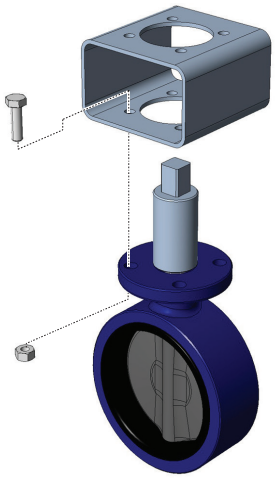

5. Install the actuator to the bracket. Tighten all bolts and apply the correct torque (refer to Table 8).

Table 8. Bottom flange torque values

Actuator size	ISO Pattern	Torque (Nm)			Torque (lbf.ft)		
		Thread	Min.	Max.	Thread	Min.	Max.
25	F03 inner pattern	M5	2.0	3.0	10-24UNC	1.5	2.2
	F05 outer pattern	M6	4.5	5.0	1/4"-20	3.3	3.7
40, 65, 100	F05 inner pattern	M6	4.5	5.0	1/4"-20	3.3	3.7
	F07 outer pattern	M8	10.5	12.5	5/16"-18	7.7	9.2
150, 200, 350	F07 inner pattern	M8	10.5	12.5	5/16"-18	7.7	9.2
	F10 outer pattern	M10	21.0	24.5	3/8"-16	15.5	18.1
600	F10 inner pattern	M10	21.0	24.5	3/8"-16	15.5	18.1
	F12 outer pattern	M12	34.5	43.0	1/2"-13	25.4	31.7
950	F10 inner pattern	M10	21.0	24.5	3/8"-16	15.5	18.1
	F14 outer pattern	M16	90.0	104.0	5/8"-11	66.4	76.7
1600, 2500	F16 inner pattern	M20	170.0	204.0	3/4"-10	125.4	150.5
	F25* outer pattern	4x M16	90.0	104.0	4x 5/8"-11	66.4	76.7
4000	F16 inner pattern	M20	170.0	204.0	3/4"-10	125.4	150.5
	F25 outer pattern	8x M16	90.0	104.0	8x 5/8"-11	66.4	76.7

6. When required, mount or adjust the visual indicator (26).

Figure 12 Actuator to valve mounting

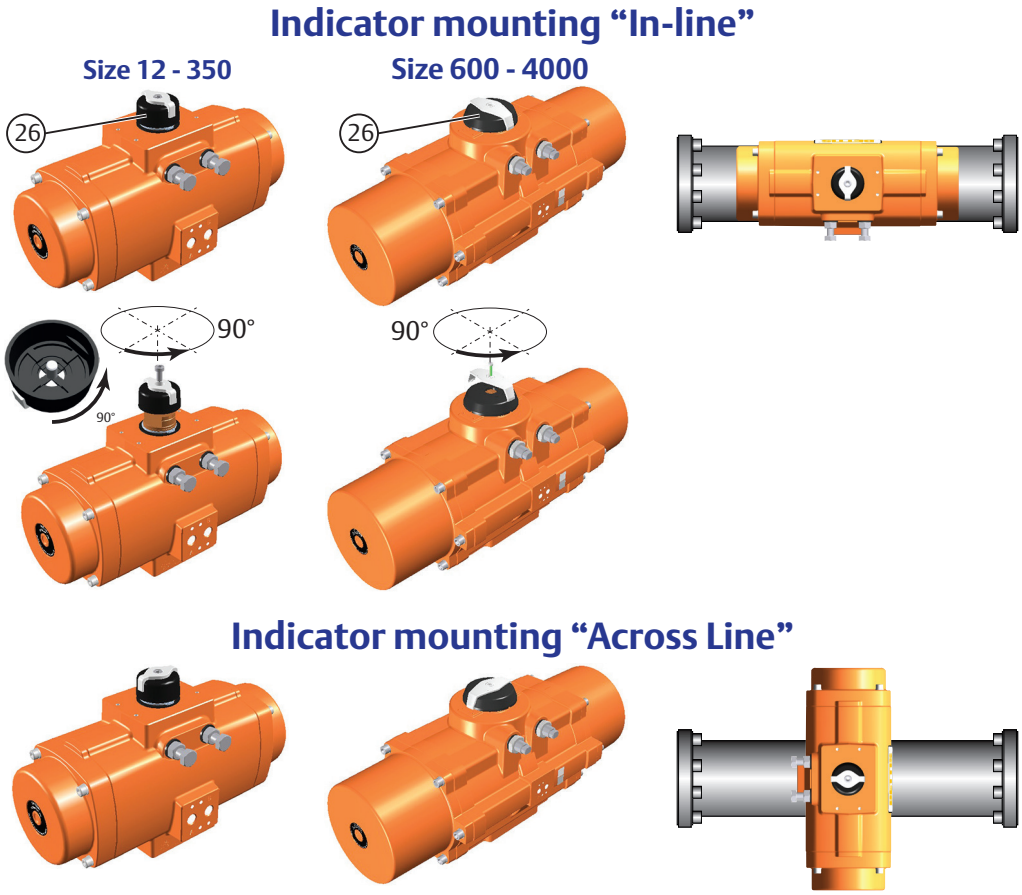

4.6 Mounting of control and feedback accessories

Solenoid valve and or switch boxes can now be mounted to the actuator. Check the instructions as shipped with these components for installation, operating and maintenance instructions.

We recommend to test-cycle the complete assembly to check correct operation.

4.7 Recommended Tubing Sizes

In case the solenoid valve is mounted remotely (i.e. in a central solenoid cabinet) and in order to supply sufficient flow of air supply to the actuator, the following tubing sizes are recommended.

Table 9. Tubing Sizes

Actuator size	Runs up to		Runs over to	
	1.2 meters	4 feet	1.2 meters	4 feet
25, 40, 65	6 mm	1/4 inch	6 mm	1/4 inch
100, 150, 200, 350, 600	6 mm	1/4 inch	8 mm	5/16 inch
950, 1600, 2500, 4000	6 mm	1/4 inch	10 mm	3/8 inch

Section 5: Mechanical Stroke Adjustment

This section explains:

- What mechanical stroke adjustment is.
- What the factory settings are.
- How to adjust the travel stops.

Bettis RPE actuators have two stroke adjustment stops for adjusting accurately the stroke of the actuator/valve assembly in open and closed position.

The factory setting of the stroke is 90°. Most quarter-turn valve applications will not require readjustment of these settings.

If required the stroke can be adjusted by means of two-stroke adjustment bolts.

Figure 13 Factory Setting

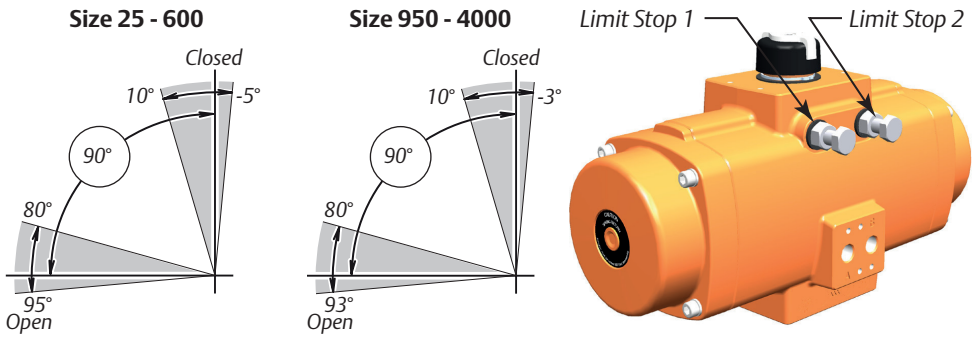

5.1 Travel Stop Adjustment

⚠ CAUTION: PRESSURIZED ACTUATOR

Do not turn out the travel stops completely when the actuator is pressurized.

When adjusting the travel stops and the actuator is still pressurized, the travel stops can be “shot” away when completely turned out.

5.1.1 Double-Acting Actuators

1. Operate valve/actuator assembly to the required "Closed" position.
2. Remove air supply.
3. Slacken locknut on the “closed” stop (2).

Figure 14

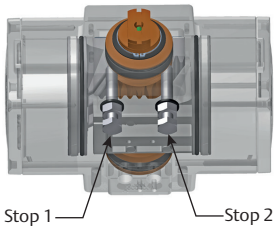

4. Turn the “closed” stop clockwise to reduce or counterclockwise to increase the travel. Consult chapter 5.1.3 (angular displacement of the pinion), to define how far the limit stop must be turned in or out.
5. Tighten the lock nut.
6. Connect air and cycle the actuator to check that the position is correct. If not repeat from 2.
7. Remove air supply.
8. For adjusting the open position repeat steps 1 to 7, but now for the open position and “open” stop (1).

5.1.2 Spring-Return Actuators

1. Connect air supply to the A port. Actuator will move to the open position.
2. Slacken locknut (24) on the “closed” stop (2).

Figure 15

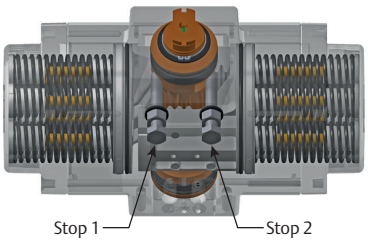

3. Turn the “closed” stop clockwise to reduce or counterclockwise to increase the travel. Consult chapter 5.1.3 (angular displacement of the pinion), to define how far the limit stop must be turned in or out.
4. Remove air supply. Actuator will move to the closed position.
5. Check whether the actuator valve assembly is in the required position.
   If not repeat steps 1 to 5.
6. Remove air supply.
7. For adjusting the open position repeat steps 1 to 6, but now for the open position and "open" stop (1).

Table 10. Limit stop dimensions

Actuator size	Thread	Bolt wrench size (mm)	Nut wrench size (mm)
25	M6	10	10
40	M8	13	13
65	M10	17 (16)*	17 (16)*
100	M10	17 (16)*	17 (16)*
150	M10	17 (16)*	17 (16)*
200	M12	19 (18)*	17 (18)*
350	M16	24	24
600	M20	30	30
950	M 22	12	32
1600	M 24	14	36
2500	M 27	17	41
4000	M 22	12	32

1. Default dimension according DIN933 standard.
2. Dimensions in brackets according ISO4017 standard.

5.1.3 Angular Displacement

Below table identifies, per actuator size, what the angular displacement of the pinions is, when using the limit stop screws.

- Turn the limit stop clockwise reduces the stroke.
- Turn the limit stop counteclockwise to increase the stroke.

Table 11. Angular Displacement limit stops

Actuator size	Turns for 5° adjustment of the pinion:	360° revolution of limit stop screw will adjust
25	0.7	7.1°
40	0.8	6.3°
65	0.6	8.3°
100	0.7	7.1°
150	1.2	4.2°
200	1.0	5.0°
350	0.8	6.3°
600	0.8	6.3°
950	1.1	4.7°
1600	1.3	4.1°
2500	1.5	3.4°
4000	3.2	1.6°

NOTICE

In case of air leakage over the limit stop bolts, turn the lock nut of the limit stop bolts tighter, until leakage stops.

Section 6: Maintenance

This section explains:

- When and how to do maintenance.
  - Normal maintenance.
  - Extraordinary maintenance.
- What to do when replacing springs.
- What the availability is of spare parts, action conversion kits and temperature conversion kits.

⚠ WARNING

Actuator must be isolated pneumatically and electrically before any (dis)assembly starts. Before mounting or (dis)assembling the actuator, consult the relevant sections of this manual.

6.1 Normal Maintenance

Bettis RPE actuators are designed to operate without maintenance for their normal working life. Normal working life is 500,000 cycles* for sizes up to RPE1600 and 250,000 for sizes RPE2500 and RPE4000.

For actuators with the optional low temperature silicon seals, we advise to replace these seals after 250.000 cycles*.

NOTE:

* 1 Cycle = one open stroke and one close stroke.

We recommend regular inspections to make certain that the actuator / valve assembly operates smoothly and to check that there are no visible or audible defects. We advise to perform the following checks upon each proof test interval complying with the rules and regulations of the country of final installation:

- Visually check the entire actuator as well as the control system (where foreseen).
- Ensure there are no leaks on the actuator parts under pressure.
- Check pneumatic connections for leaks. Tighten tube fittings as required.
- Check if manual override (where foreseen) is regular.
- Check if pneumatic filter cartridge (where foreseen) is sound and filter bowl (where foreseen) has been cleaned properly.
- Check the setting of the relief valves (where foreseen).
- Verify that the power fluid supply pressure value is within the required range.
- Remove built-up dust and dirt from all actuator surfaces.

- Inspect actuator paint work for damages to ensure continued corrosion protection. Touch-up as required in accordance with the applicable paint specification.
- Operate the Actuator/Valve assembly for 2 complete open/close cycles with complete closing of the valve.
- Verify the correct performing of open – close operations (e.g. check locally, or automatically via Logic solver, the correct movement of the actuator).

All actuators are supplied with sufficient lubrication for their normal working life. If required, see Section 9.1 (Grease instructions) for the recommended grease.

For mounting the parts of the repair kit follow the instruction of the Decommission, Disassembly and Reassembly chapters of this manual.

6.2 Inspection and Repair

Replacement of internal seals and bearings allows to you extend the normal working life. Service kits, containing all necessary spare parts (like seals, bearings, grease and instructions) can be obtained through authorized Emerson – Actuation Technologies distributors.

6.2.1 Service Kits

All soft seals, bearings, and nonreusable parts are included in the recommended service kit. The service kit is identical for both the double-acting and the spring-return models.

6.2.2 Spring-Return Actuator

For the spring-return models, we recommend a set of spare springs for each different model in addition to the recommended spare parts kit.

On spring-return actuators, the spring cartridges can be replaced. **SPRING CARTRIDGES SHOULD ALWAYS BE REPLACED IN COMPLETE SETS**. Spring kits are available through authorized Emerson – Actuation Technologies distributors.

Section 7: Decommission (Out of Service)

This section explains:

- How to decommission an actuator in a safe way.

7.1 Before You Start

⚠ WARNING: MOVING PARTS

Actuator must be isolated pneumatically and electrically before any (dis)assembly starts. Before mounting or (dis)assembling the actuator consult the relevant sections of this manual.

Actuator can move when removing supply pressure and/or electrical control signal of actuators. If not already there, a spring-return actuator will cycle to its fail position.

When removing any ball valve or plug valve assemblies from a pipe system, isolate the piping system on which the Actuator is installed and relieve any media pressure that may be trapped in the valve cavities before removing the actuator for maintenance.

A spring-return actuator mounted on a valve, which is stuck in mid stroke, contains a high spring load which will cause a sudden rotation of the actuator versus the valve or valve bracket during disassembly. This can cause serious injury to personnel or damage to property.

Refer to Appendix A for instructions to safely remove the spring load before disassembling the spring-return actuator from valve or bracket.

Important

Refer to the Safety Guide for Lifting Instructions.

7.2 Removing the actuator from the valve

1. Disconnect all air supply hoses (Ports A and B or solenoid).
2. Disconnect all electrical wirings of the switch box.
3. Disconnect the electrical wiring of the solenoid valve.
4. Remove the bolts and nuts from the valve flange.
5. Remove the bracket from the actuator.
6. Remove the switch box and solenoid valve. Refer to the documentation of the switch box and solenoid valve for safe disassembly.

Figure 16 Removing actuator from valve

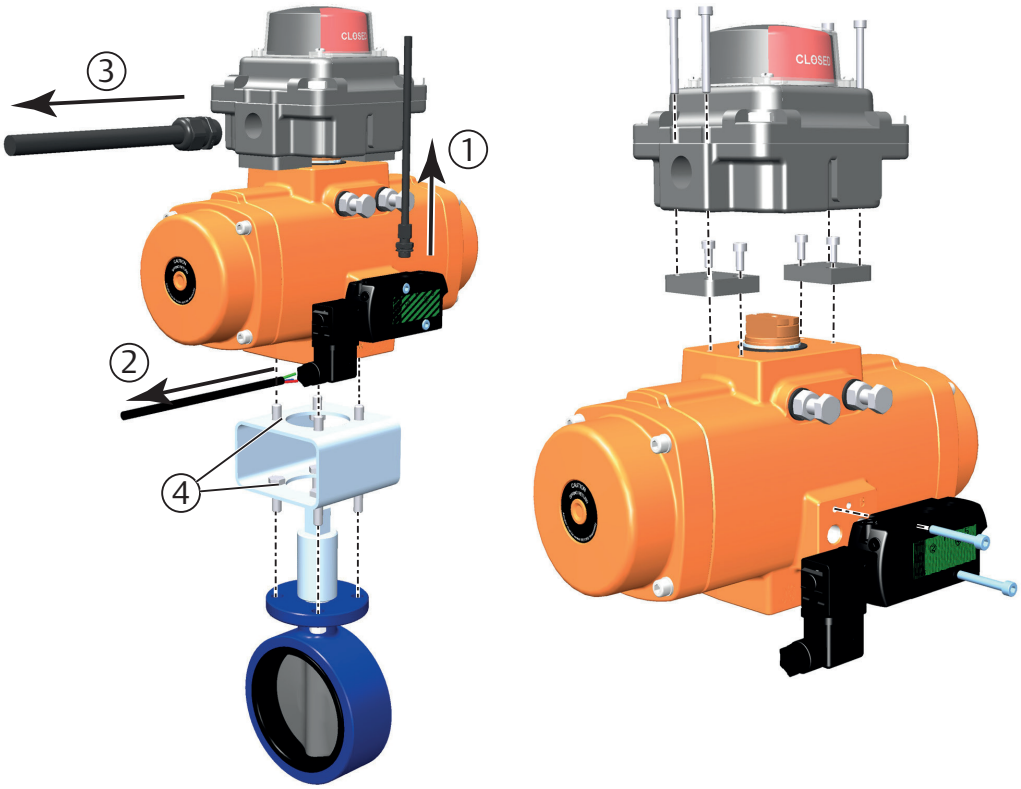

Section 8: Disassembly

This section explains:

- How to disassemble an actuator safely.

Tip

The instructions of this section can be used for maintenance or reconfiguration like spring set change or maintenance.

Reference numbers for components refer to the exploded view in section 11.

In case of maintenance, discard all the used soft parts like O-ring seals, guide bands, wear strips and circlip.

⚠ WARNING

Actuator must be isolated pneumatically and electrically before any (dis)assembly starts.

Before mounting or (dis)assembling the actuator consult the relevant sections of this manual.

⚠ CAUTION: PRESSURIZED ACTUATOR

Spring-return actuators contain springs in a compressed state. Follow these instructions to release the spring force safely.

The end caps of spring-return actuators sizes 25 to 600 should be free of the spring load after 10 full turns (crosswise relaxing) of the end cap screws. If there is still spring load on the end cap, this might indicate a broken spring cartridge. Stop this disassembly procedure immediately. Continuing might cause the end cap to be “shot” away causing serious injury.

Spring return actuator size 950 to 4000 have long end cap screws to release the spring load safely.

Refer to Appendix A for instructions to safely remove the spring load before disassembling the end cap of a spring-return actuator with a broken spring cartridge.

NOTICE

The actuator is designed to be installed, commissioned and maintained using generic tools like wrenches, Allen keys and screwdrivers.

Refer to the tables in this section or refer to Appendix B Tool and Torque tables.

8.1 Removing End Caps (Sizes 25 to 600)

1. For Double-Acting actuators, do the following:
   a. Remove the screws (8) and washers (10) of the end caps (6).
   b. Remove the o-ring (11) and "B" port seal (2). Discard these parts.

Figure 17 Double-Acting End Caps Removal

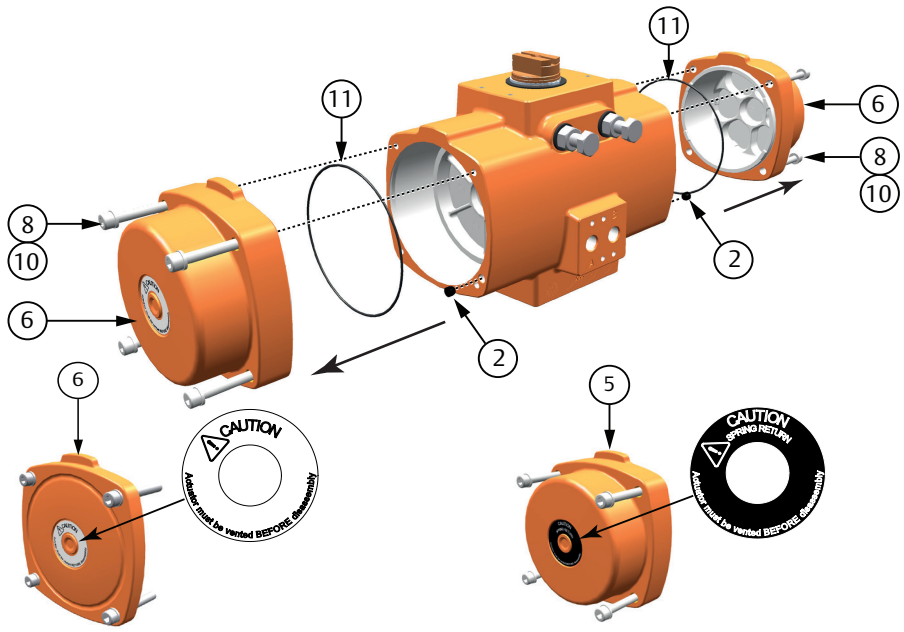

Double acting end caps (6) are fitted with a white warning sticker. Spring return end caps (5) are fitted with a black warning sticker.

Actuator sizes 25 to 100 have high end caps for double-acting and spring-return models.

Actuator sizes 150 to 4000 have low end caps for double-acting models and high end caps for spring return models.

2. For Spring-Return actuators, do the following:
   a. **Tip:** For actuators with assembly code CW, turn back the right hand limit stop screw (30) 2 full turns.
      For actuators with assembly code CC, turn back the left hand limit stop screw (30) 2 full turns.
      This will lower the spring force on the end cap and reduces the screw out length of the end cap screws.
   b. Uniformly loosen the screws (9) of the end caps (5) 1/4-1/2 turns at a time, in sequence, as per figure 18, to relieve the pre-load of the springs.
   c. Remove the o-rings (11) and "B" port seals (2). Discard these parts.

Figure 18 Spring-Return End Caps Removal

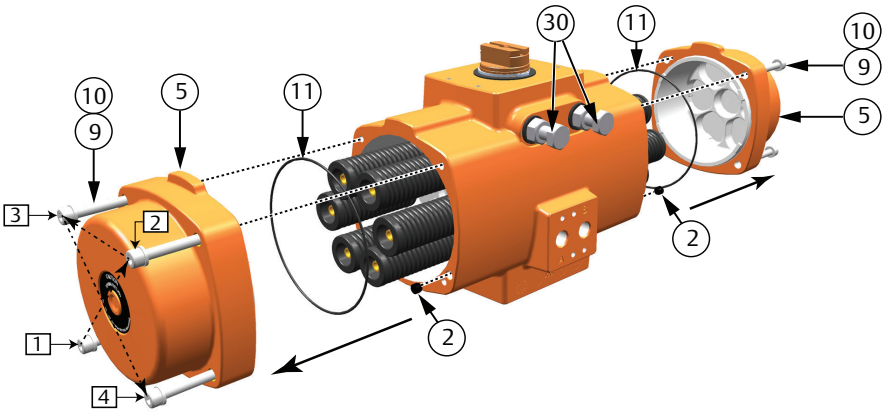

8.2 Removing End Caps (Sizes 950 to 4000)

1. For Double-acting actuators, do the following:
   a. Remove the screws (8) and washers (10) of the end caps (6).
   b. Remove the o-ring (11) and "B" port seal (2). Discard these parts.

Figure 19 Double-Acting End Caps Removal sizes 950 to 4000

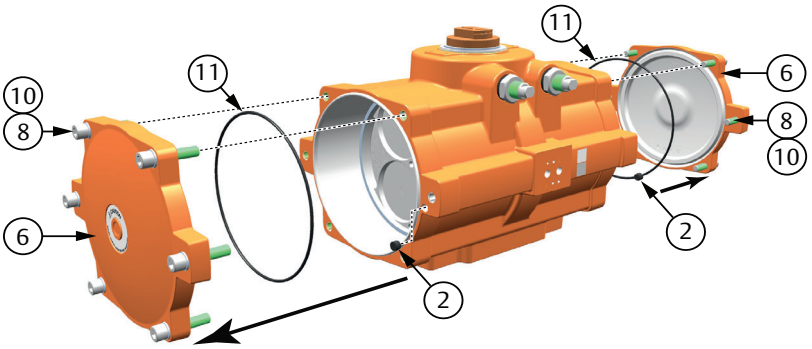

2. For Spring-return actuators, do the following:
   a. **Tip:** For actuators with assembly code CW, turn back the right hand limit stop screw (30) 2 full turns.
   For actuators with assembly code CC, turn back the left hand limit stop screw (30) 2 full turns.
   This will lower the spring force on the end cap and reduces the screw out length of the end cap screws.
   b. Uniformly loosen the screws (9) of the end caps (5) 1/4-1/2 turns at a time, in sequence, as per figure 20, to relieve the pre-load of the springs.
   c. Remove the o-rings (11) and "B" port seals (2). Discard these parts.

Figure 20 Spring-Return End Caps Removal sizes 950 to 4000

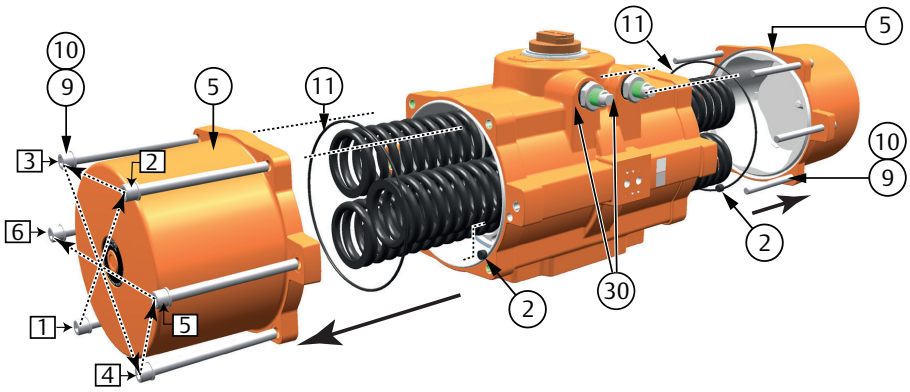

8.3 Removing Spring Cartridges or Springs

3. Remove the spring cartridges or springs (7).

Figure 21 Removing Spring Cartridges size 25 to 600

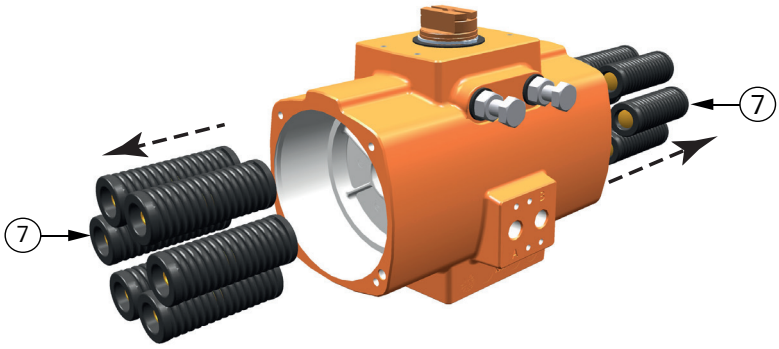

Figure 22 Removing Springs size 950 to 4000

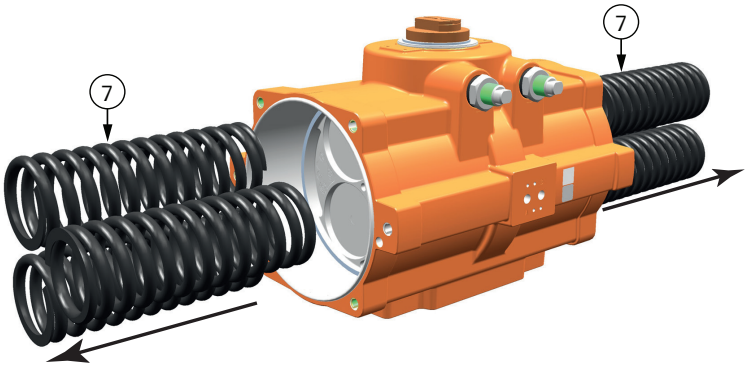

8.4 Removing of Limit Stop

1. Remove the limit stop screws (30), limit stop nuts (31), limit stop washers (32) and limit stop o-rings (33). Discard the o-rings.

Figure 23 Limit Stop Removal

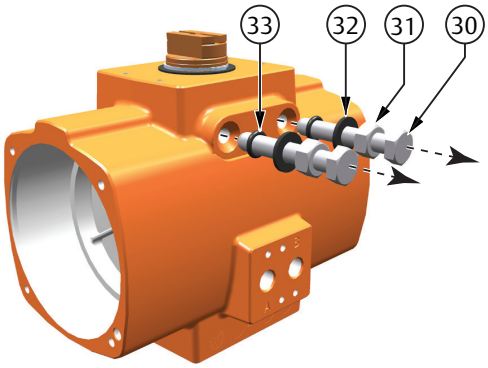

8.5 Removing Pistons

1. Use a wrench and turn the pinion counterclockwise until the pistons (14) come out of the body.
2. Remove the piston bearings (15), piston rack bearing strips (17) and piston o-ring seals (16). Discard these parts.

8.6 Removing Pinion

1. Remove the circlip (27) and thrust bearing (23) on top of the pinion assembly. For sizes 950 to 4000 remove also the top pinion bearing (19).
2. Remove the pinion (18) by pushing it downwards. For Size 4000, remove the backup ring (29), O-ring pinion top (21) the cam (24) and cam thrust washer (25) through the main bore of the housing.
3. Remove the pinion O-ring seals (21/22) and the pinion bearings (19/20). For Size 950 to 2500, remove also the backup ring (29).
4. Discard all of these parts.

Figure 25 Pinion Removal

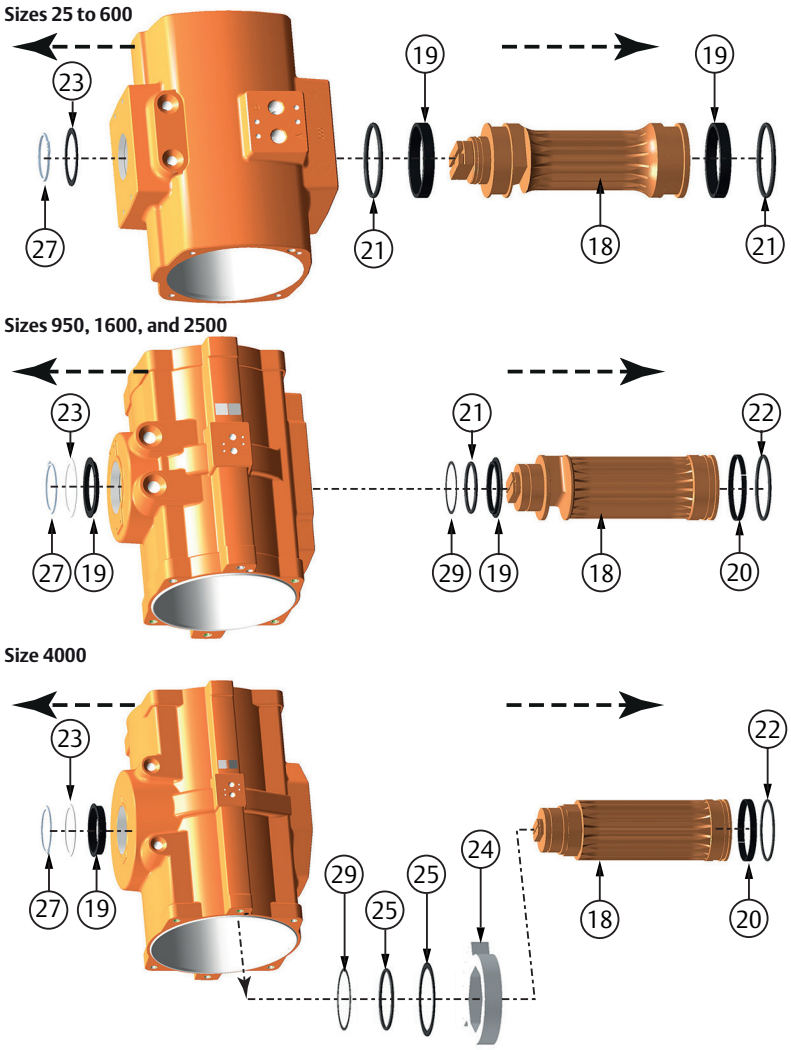

Table 12. Recommended circlip pliers according DIN 5254 (or equal) for circlips.

Actuator size	Pinion top diameter		Pliers according DIN 5254	Actuator size	Pinion top diameter		Pliers according DIN 5254
25 - 100	22 mm	0.866"	A2	**1600**	75 mm	2.953"	A3
150 - 350	36 mm	1.417"	A3	**2500**	95 mm	3.74"	A4
600	55 mm	2.165"	A3	**4000**	96 mm	3.78"	A4
950	65mm	2.559"	A3				

8.7 Cleaning the Components

In case of maintenance, use a clean dry cloth and thoroughly wipe clean and remove old grease from:

- The inside and outside of the body including thread holes and crevices/grooves
- The pinion gears.
- The pistons.

Figure 24 Removing Pistons

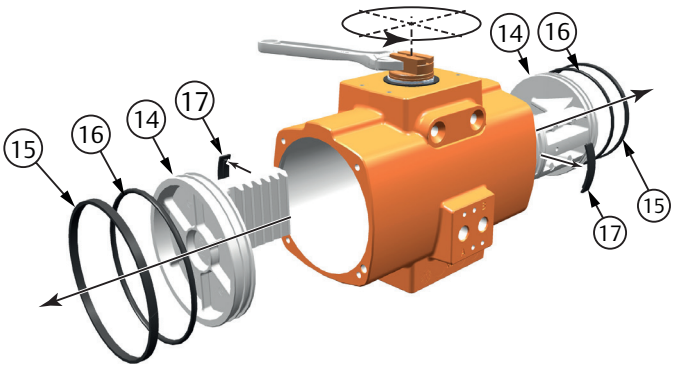

Section 9: Reassembly

This section explains:

- Which parts and how to grease them.
- How to reassemble a complete actuator.
- How to set the stroke adjustment bolts after reassembly.
- How to do a basic function and air leak test.

Tip

The instructions of this section can be used for maintenance or reconfiguration like spring set change or maintenance.

Reference numbers for components refer to the exploded view in section 11.

In case of maintenance, discard all used soft parts like O-ring seals, guide bands and wear strips and circlip and replace them with the parts as supplied in the repair kit.

In case of reconfiguration replace the parts as supplied in the conversion kit (see also chapter 6).

Refer to the Safety Guide for Lifting Instructions.

NOTICE

The actuator is designed to be installed, commissioned and maintained using generic tools like wrenches, Allen keys and screwdrivers.

Refer to the tables in this section or refer to Appendix B Tool and Torque tables.

9.1 Grease Instructions

Check the product coding on the product labels and chapter 3 of this manual, to define which type of grease to use.

- For standard actuators (-20°C to +80°C / -4°F to +176°F): Castrol High Temperature grease (or equivalent).
- For low temperature operation (-40°C to +80°C / -40°F to +176°F): Castrol Tribol GR TT 1 PD (previously known as Castrol OPTITEMP TT1) or LG2 grease (or equivalent).
- For high temperature operation (-10°C to +120°C / +14°F to +250°F): Castrol High Temperature grease (or equivalent).

We recommend using a suitable sized paint brush to apply the required amount of grease on the parts as per Table 12 and Figure 23.

Table 13. Grease Instructions

Part		Section of part	Amount of grease
O-rings:	A	Completely	Light film
Housing Parts:	B	Piston bore	Light film
	C	Top pinion bore	Light film
	D	Bottom pinion bore	Light film
Piston Parts:	E	O-ring & bearing groove	Light film
	F	Rack teeth	Half the teeth depth full with grease
	G	Piston bearing	Light film on outside
	H	Piston rack bearing strip	Light film
Piston Parts:	J	Pinion bottom & O-ring groove	Light film
	K	Pinion top & O-ring groove	Light film
	L	Gear teeth	Half the teeth depth
	M	Pinion top bearing	Light film (inside and out)
	N	Pinion bottom bearing	Light film (inside and out)

Figure 26 Grease Instructions

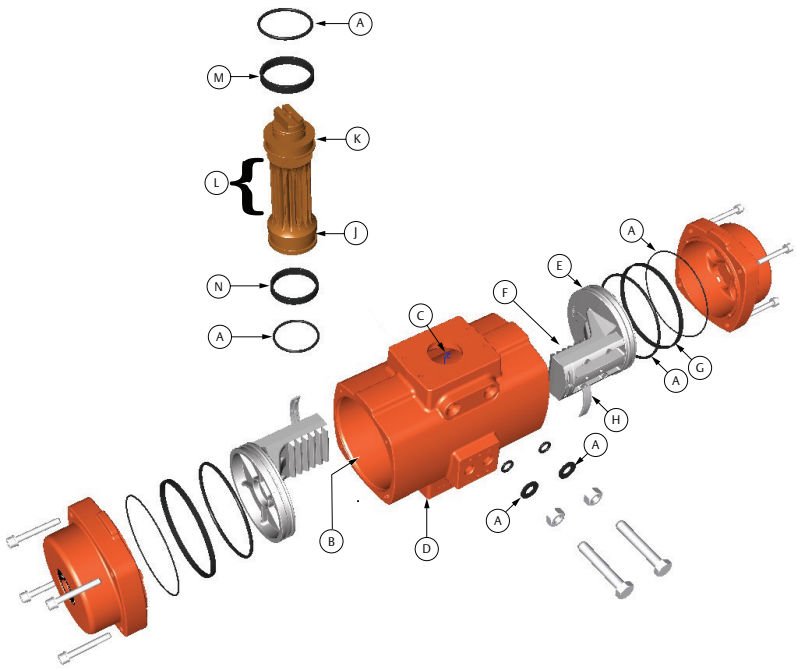

9.2 Reassembly of the pinion

1. Grease the pinion parts according to chapter 9.1.
2. Install the pinion bearings (19/20) and the O-ring seals (21/22) on the pinion (18). For Size 950 to 2500, install also the the backup ring (29).
3. Insert the pinion (18) in the housing. For size 4000: mount first the cam (24), cam thrust washer (25), pinion top O-ring (21) and backup ring (29) through the main-bore onto the pinion (18).
4. For sizes 950 to 4000 install first the top pinion bearing (19). For all sizes, install the thrust washer (23) and mount the circlip (27) on the pinion top.
   - Install the new circlip onto its mating groove on the top shaft extension and with the non-sharp edge (2) towards the housing and the sharp edge (1) towards the top of the shaft.

Figure 27 Reassemble the pinion

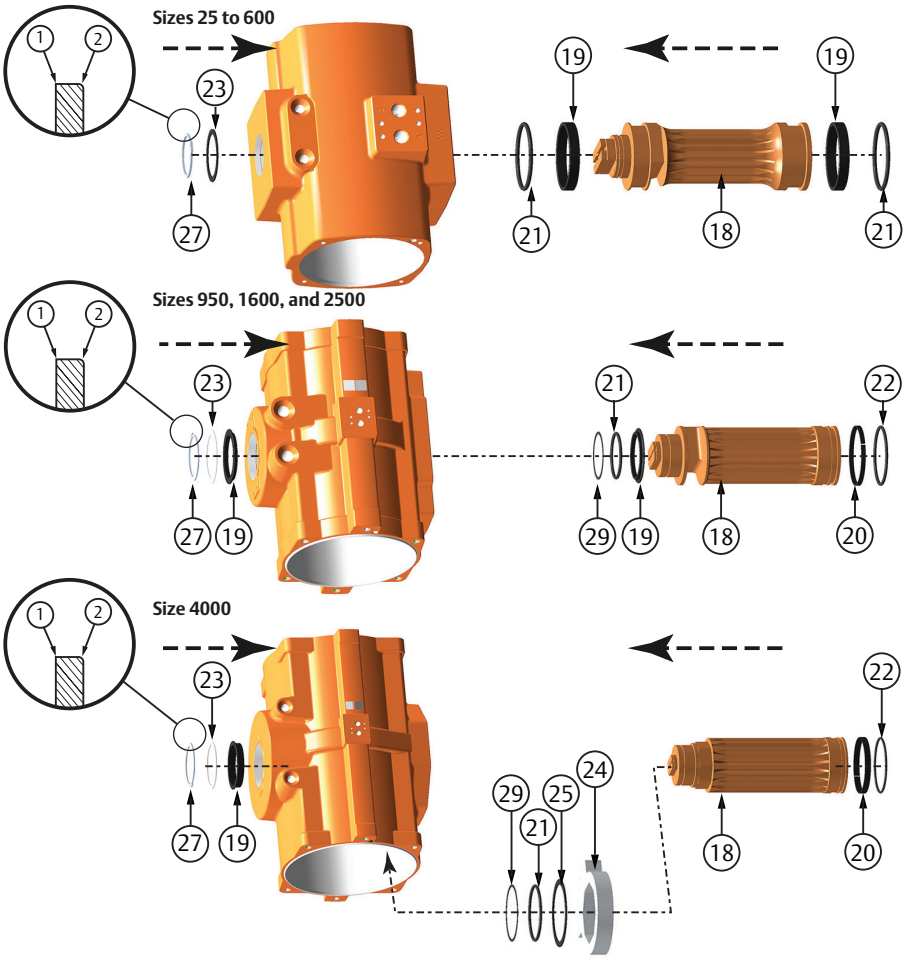

Table 14. Recommended circlip pliers according DIN 5254 (or equal) for circlips.

Actuator size	Pinion top diameter		Pliers according DIN 5254	Actuator size	Pinion top diameter		Pliers according DIN 5254
25 - 100	22 mm	0.866"	A2	**1600**	75 mm	2.953	A3
150 - 350	36 mm	1.417"	A3	**2500**	95 mm	3.74	A4
600	55 mm	2.165"	A3	**4000**	96 mm	3.78	A4
950	65mm	2.559"	A3				

9.3 Reassembly of the pistons

NOTICE

Before reassembling the pistons, check the required assembly code (see section 4.2).

1. Grease the piston parts according to step 9.1.
2. Install the piston rack bearing strips (17) and piston O-ring seals (16) on the pistons (14). Ensure all these parts are kept in place during assembly.

Figure 28 Reassemble the pistons

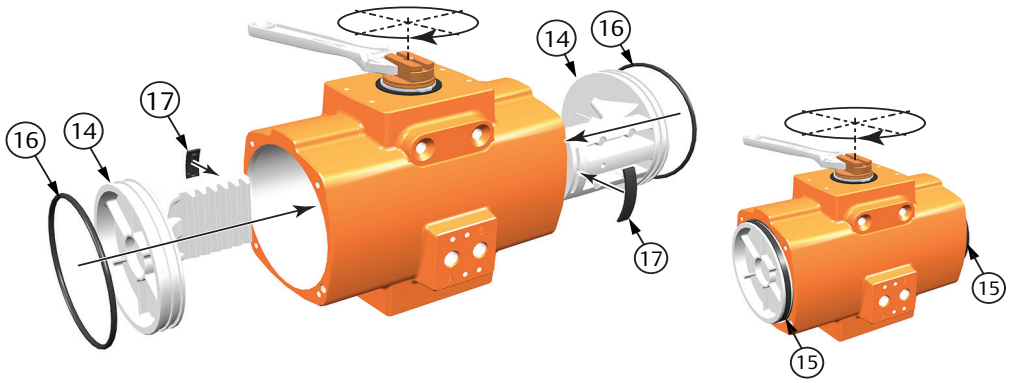

3. Align the pinion (see Figure 26) so that the teeth on the pinion will pick up the pistons rack teeth when turning the pinion. Note the position of the pinion top slot and the cam on the pinion top:
   - For standard or Spring-to-Close: Assembly Code CW.
   - For reverse or Spring-to-Open: Assembly Code CC.

4. Slightly push the pinion inward to engage with the pinion.
   - Ensure that smooth movement and 90-degree operation can occur without moving the pistons out of the actuator body.
   - For larger pistons, use a rubber mallet and slightly hitting the pistons inward to engage with the pinion.
5. When the pistons are moved 90° inwards (see figure 26), check that the pinion slot on the pinion top is:
   - Perpendicular to the length centre line of the house for assembly code CW.
   - In line to the length centre line of the house for assembly code CC.
6. If not, turn pinion to move the pistons outward until they disengage from the pinion. Shift one tooth of the pinion, reassemble and check again.
7. Move the pistons outward so that just the bearing groove sticks out of the housing. Fold the piston bearings (15) around the piston and hold the bearing ends in place while moving the pistons inwards.
   - For larger pistons, use a rubber mallet and slightly hitting the pistons inward to engage with the pinion.

Figure 29 Position of the slot and the cam on the pinion top

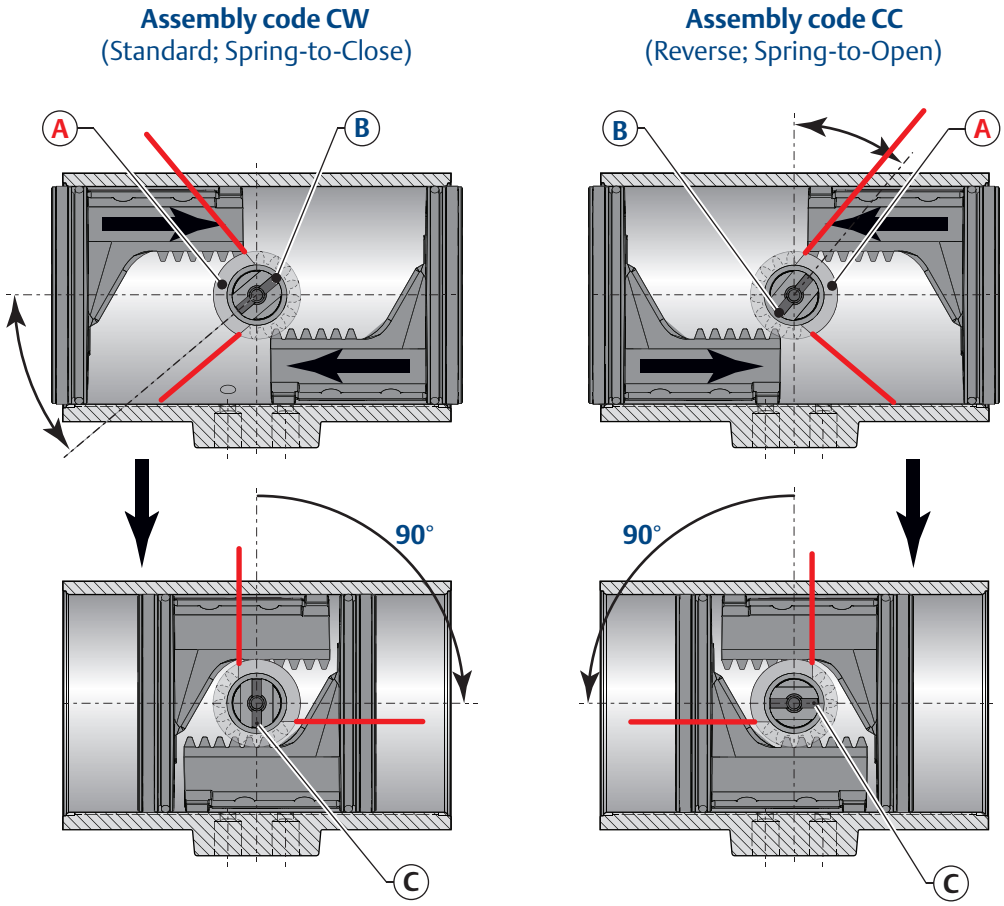

A = Position of cam

B = Position of slot and dot in pinion.

C = Final position of pinion dot.

NOTE:
When the pistons are completely moved inwards, the pinion top will show a 5° over travel.

9.4 Reassembly and settings of the limit stops

1. Install the limit stop screws (30), limit stop nuts (31), limit stop washers (32) and limit stop O-rings (33).

Figure 30 Install Limit Stop Bolts

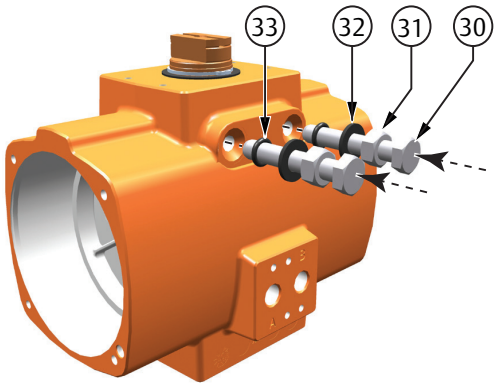

2. Move the pistons inward until the slot in the top of the pinion is perpendicular to centerline of the housing.
3. Double check if the position of the slot and the cam on the pinion top is in the correct position (see figure 26). Screw in the right hand travel stop until it comes into contact with the pinion stop face.
4. Move the pistons outward until the slot in the top of the pinion is in line with the centerline of the housing.
5. Screw in the left hand travel stop until it comes into contact with the pinion stop face.
   - For accurate travel stop adjustment of the actuator on the valve, see section 5.

9.5 Reassembly of the end caps

9.5.1 Double-Acting actuators

1. Grease the O-ring seals (11) and B port seals (2) according to step 9.1.
2. Ensure that O-ring seals (11) and B port seals (2) are kept in place during assembly.
3. Install the end caps (6) and tighten the end cap screws (8).
   Refer to Table 15 for the correct torque.

Figure 31 Double-Acting end cap assembly

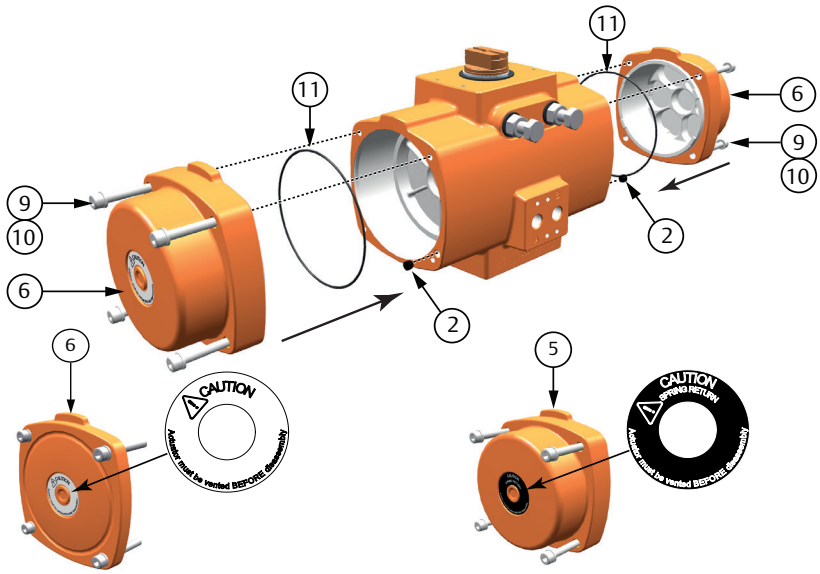

Double acting end caps (6) are fitted with a white warning sticker. Spring return end caps (5) are fitted with a black warning sticker.

Actuator sizes 25 to 100 have high end caps for double-acting and spring-return models.

Actuator sizes 150 to 4000 have low end caps for double-acting models and high end caps for spring return models.

Table 15. End cap Screw Torque

Actuator size	Thread	Tool	Size	Torque (Nm)			Torque (lbf.ft)		
				Target	Min.	Max.	Target	Min.	Max.
25	M5	Allen Key	SW 4	2.0	1.6	3.0	1.5	1.2	2.2
40	M5		SW 4	2.0	1.6	3.0	1.5	1.2	2.2
65	M5		SW 4	2.0	1.6	3.0	1.5	1.2	2.2
100	M5		SW 4	2.0	1.6	3.0	1.5	1.2	2.2
150	M6		SW 5	3.3	2.6	5.1	2.4	1.9	3.8
200	M6		SW 5	3.3	2.6	5.1	2.4	1.9	3.8
350	M8		SW 6	8.4	6.7	12.2	6.2	4.9	9.0
600	M10		SW 8	15.3	12.2	24.8	11.3	9.0	18.3
950	M12		SW10	24.3	19.4	41.6	17.9	14.3	30.7
1600	M12		SW10	24.3	19.4	41.6	17.9	14.3	30.7
2500	M12		SW10	24.3	19.4	41.6	17.9	14.3	30.7
4000	M14		SW12	43.5	34.8	66.4	32.1	25.7	49.0

9.5.2 Spring-Return actuators

Important

Bettis RPE-Series Spring return actuators are supplied with springs on each side of the actuator. Throughout the RPE-Series size range, there are two different spring designs:

- Sizes RPE25 to RPE600 have 6 springs on each side (see figure below).
- Sizes RPE950 to RPE4000 have 3 springs on each side (see chapter 9.5.3). Check below figures to see where to place the spring cartridges in case of spring set conversion.

When replacing spring cartridges in a spring-return actuator, ensure that the cartridges are replaced in their identical position from where they were removed.

Before assembling the spring cartridges and end caps, make sure that the pistons are completely inwards.

Figure 32 Spring cartridge placement

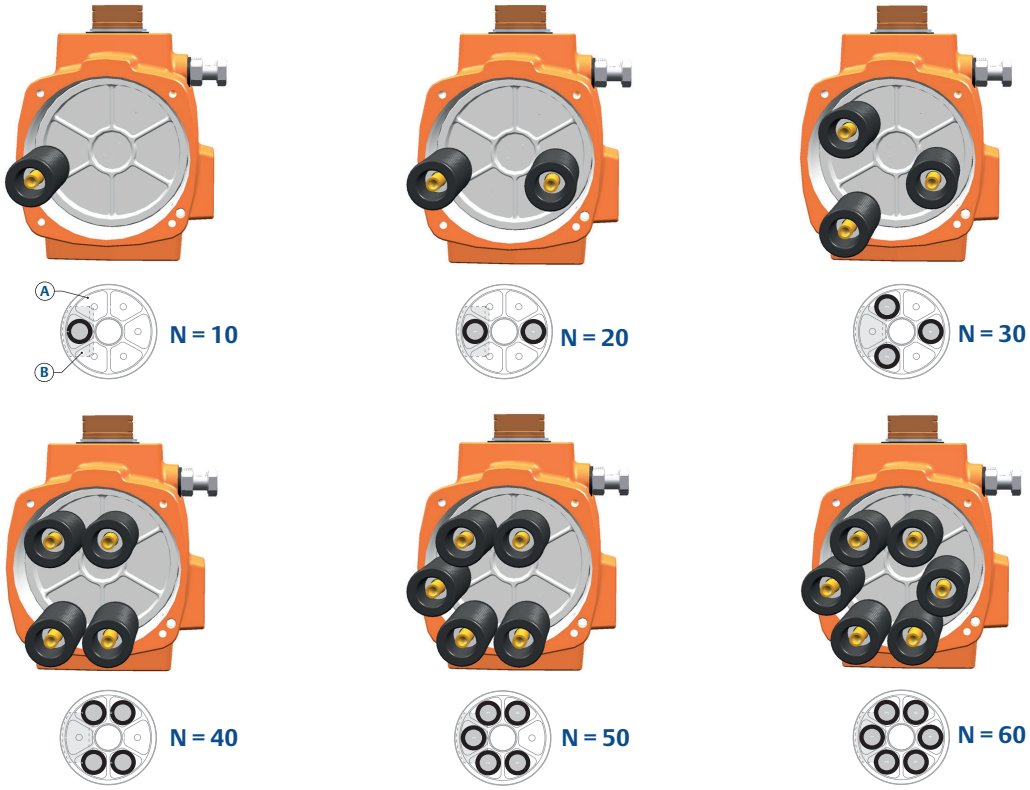

A = Piston top view
B = Position of piston gear rack

1. Grease the O-ring seals (11) and B port seals (2) according to step 9.1.
2. Ensure that O-ring seals (11) and B port seals (2) are kept in place during assembly.
3. Place the spring cartridges in actuator as per required spring set (see Figure 32).
4. Put the end cap screw washer (10) on the end cap screw (9) and tighten each end cap screw in small equal turns and in the sequence as per Figure 33. Refer to Table 15 for the correct torque. We recommend to use some grease on the screws for easier fastening.

Figure 33 Spring Return End cap assembly size 25 to 600

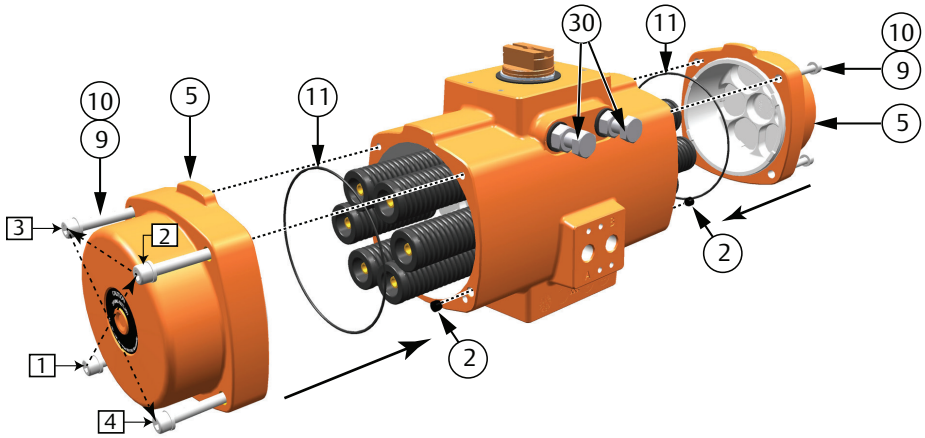

9.5.3 Spring-Return actuators - Size 950 to 4000

Important

Bettis RPE-Series Spring return actuators are supplied with springs on each side of the actuator. Throughout the RPE-Series size range, there are two different spring designs:

- Sizes RPE25 to RPE600 have 6 springs on each side (Chapter 9.5.2).
- Sizes RPE950 to RPE4000 have 3 springs on each side (see figure below).

Check below figures to see where to place the springs in case of spring set conversion.

When replacing springs in a spring-return actuator, ensure that the springs are replaced in their identical position from where they were removed.

Before assembling the springs and end caps, make sure that the pistons are completely inwards.

Figure 34 Spring placement size F950 to F4000

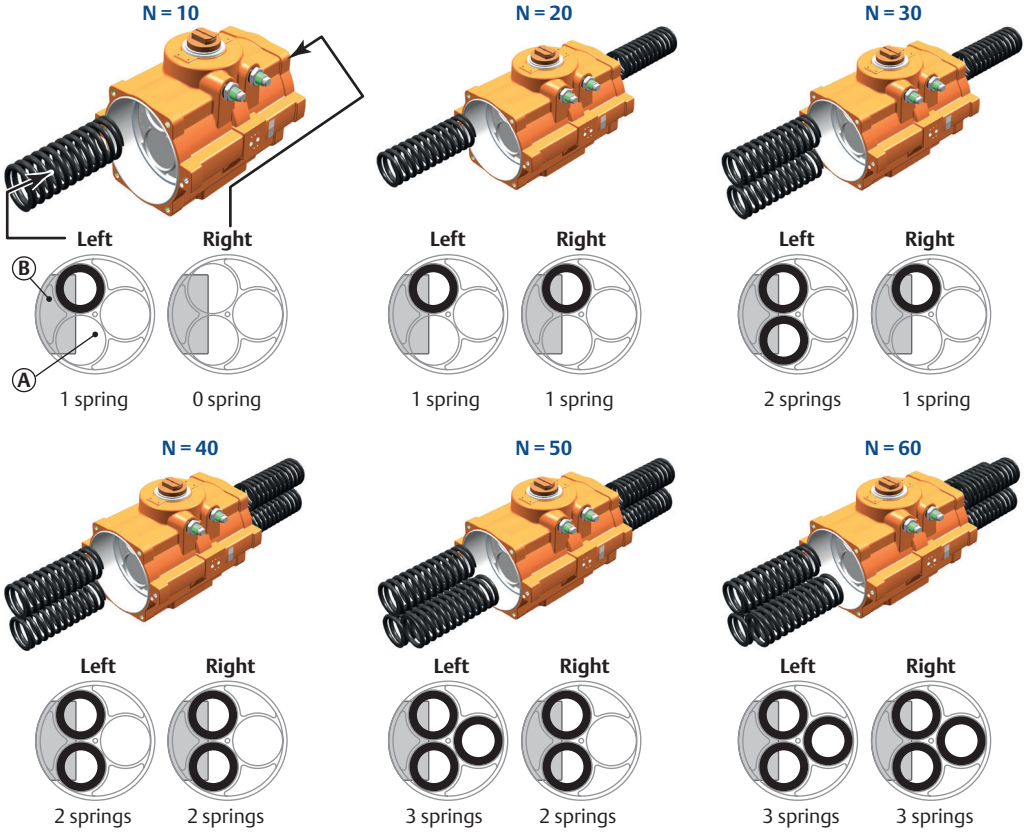

A = Piston top view
B = Position of gear rack

1. Grease the O-ring seals (11) and B port seals (2) according to step 9.1.
2. Ensure that O-ring seals (11) and B port seals (2) are kept in place during assembly.
3. Place the spring in actuator as per required spring set (see Figure 29).
4. Put the end cap screw washer (10) on the end cap screw (9) and tighten each end cap screw in small equal turns and in the sequence as per Figure 35.
   Refer to Table 15 for the correct torque. We recommend to use some grease on the screws for easier fastening.

Figure 35 Spring Return end cap assembly size 950 to 4000

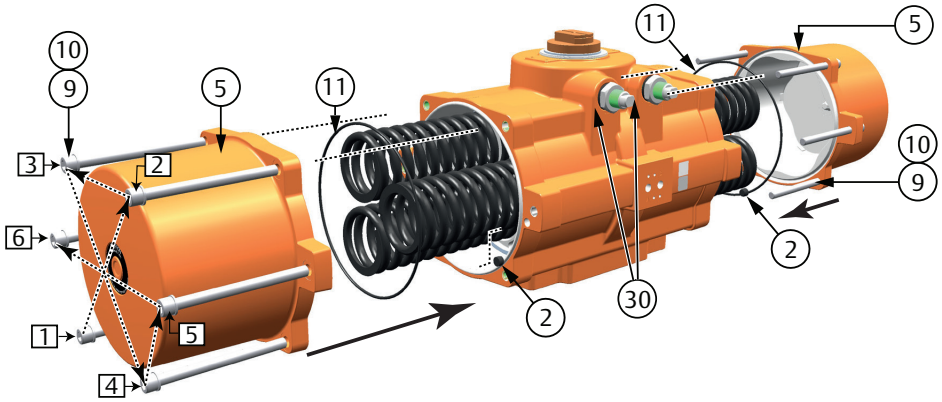

9.6 Basic function and Air Leak Test

⚠ CAUTION: MOVING PARTS

Applying pressure to the actuator will cause the actuator/valve assembly to operate.

1. Apply pressure (max. 8 bar/120 psi) to ports A and B. Use some soap suds at the indicated points: around pinion top (1), pinion bottom (2), the end caps (3) and limit stops (4).
2. In case of leakage around:
   a. The limit stop bolts: Turn the lock nut of the bolts tighter, until the leakage stops.
   b. The end caps: Disassemble the end caps, replace o-rings and reassemble.
   c. The pinion top or bottom and A- or B- port: Disassemble the complete actuator, replace o-rings and reassemble.

Figure 36 Basic function and air leak test

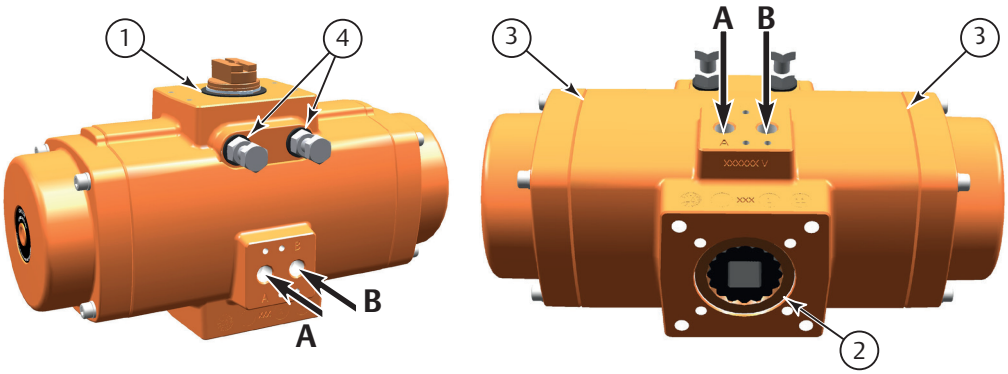

Section 10: Troubleshooting

10.1 Mechanical Problems

Problem	Possible error	Solution	Where to find
Feedback position and actual position are not the same.	Actuator and valve are mounted 90° rotated in relation to each other.	Remove actuator from valve. Check assembly code of actuator. Put both valve and actuator in “Closed” position. Mount actuator on valve.	Section 4
Valve is in “Closed” position, actuator is in “Open” position and will not move anymore.			
Valve does not reach the completely “Closed” or “Open” position.	Limit stop screws are not set correctly.	Readjust the limit stop screws.	Section 5
	Insert is not mounted properly.	Mount the insert in the right position. Remark: Rotate insert to one cam = 22.5°.	Section 4.5
	Pressure to low.	Apply pressure as per sizing.	
	Sizing is wrong.	Check valve torque data with actuator torque data.	
	Pinion is mounted in the wrong position.	Re assemble actuator.	Section 9
Actuator rotates, valve does not.	No coupling between actuator shaft and valve spindle.	Install a coupling between actuator shaft and valve spindle.	Section 4.5
Actuator does not rotate or does not rotate smoothly.	Broken gearing on pistons or pinion.	Contact nearest Bettis representative to replace actuator.	
	Spring or Spring cartridge is broken.	Contact nearest Bettis representative to replace actuator.	Appendix A.
Limit stop screws cannot be turned out anymore.	Limit stop screws is bend.	Contact nearest Bettis representative to replace actuator.	

10.2 Pneumatic Problems

Problem	Possible error	Solution	Where to find
Actuator does not react to electrical control signal.	There is no supply pressure at the actuator.	Supply the right pressure to the actuator.	Section 2.3 Check that the actual supply pressure is higher than the sizing pressure.
Actuator does not react good to electrical control signal.	There is sufficient supply air pressure but insufficient supply air capacity.	Take care the supply air tubing has the right dimensions.	Section 4.6
	Supply pressure too low, causing pilot operated solenoid valve to fail.	Check that supply pressure at the actuator and solenoid is sufficient to operate the actuator.	Section 2.3 Check that the actual supply pressure is higher than the sizing pressure.
	Solenoid valve is not mounted properly.	Check the solenoid valve mounting.	Instructions shipped with the solenoid valve.
	Speed control throttle (if present) blocks air flow.	Turn the speed control more open.	Instructions shipped with the speed control valve.
	Manual override (if present) on the Solenoid Valve is locked.	Unlock manual override on the solenoid valve.	Instructions shipped with the manual override.
Air leakage between actuator and solenoid valve.	Sealing between solenoid valve and actuator is not mounted air tight.	Reassemble solenoid valve taking care, that all seals are in place.	Instructions shipped with the solenoid valve.
Double-acting actuator will only move to “open” position.	Actuator has wrong solenoid valve configuration.	Mount a solenoid valve suitable for double-acting actuators (4/2 or 5/2 function).	Instructions shipped with the solenoid valve.
		Check that conversion plate on solenoids, that have both 3/2 and 5/2 functions, is in the right position.	Instructions shipped with the solenoid valve.
Leakage notice on the actuator.	Seals on the limit stops screws are not air tight.	Turn the lock nut of the bolts tighter; until the leakage stops.	Section 9.6
	Seals on the end caps are not air tight.	Disassemble the end caps, replace O-rings and reassemble. Consider to replace all O-ring seals and bearings.	Section 9.6 or Section 6
	Seals on the pinion top and bottom are not air tight.	Disassemble the complete actuator, replace O-rings and reassemble. Consider to replace all O-ring seals and bearings.	Section 9.6 or Section 6

10.3 Electrical Problems

Problem	Possible error	Solution	Where to find
Actuator does not react to control signals.	Control wiring. Power supply wiring or feedback wiring are not right connected.	Connect all wiring in the right way.	Instructions of the control or feedback accessories.
	The power supply voltage is not is not the same as the voltage of the applicable solenoid valve.	Connect the right power supply voltage.	Instructions of the solenoid valve.
There are problems with position feedback after sending the actuator to either the “Open” or “Closed” position.	The wiring of the feedback signals may be switched.	Connect the feedback wiring in the right way.	Instructions of the feedback device.

Section 11: Parts List and Spare Parts Recommendations

11.1 Actuator sizes RPE25 to RPE600

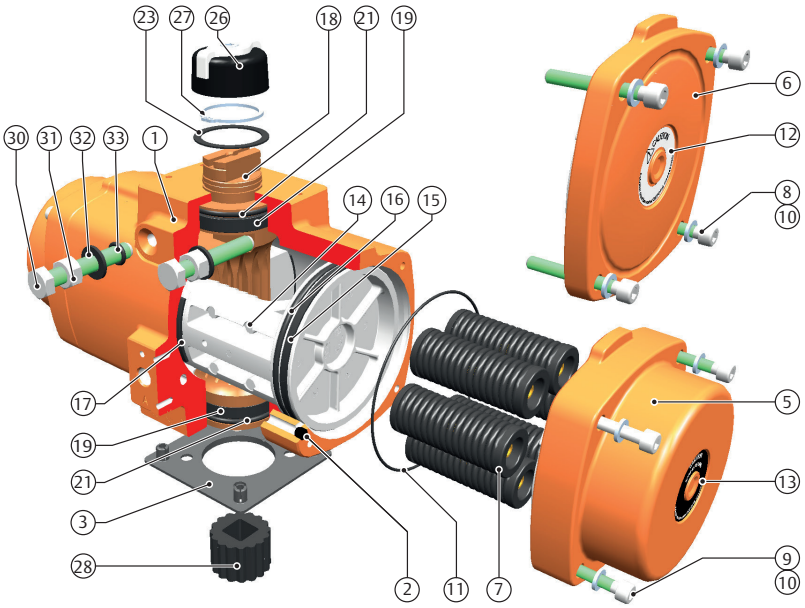

Table 16. Parts List

Pos.	Qty	Notes	Description	Material
1	1		House	Cast Aluminium alloy
2	2	1	B-port seal	Nitrile rubber
3	1		Center plate (optional)	Nylon PA6, Black
5	2	2	End cap SR (DA)	Cast Aluminium alloy
6	2	2	End cap DA	Cast Aluminium alloy
7	Max. 12		Spring cartridge	Spring steel
8	8		End cap screw DA	Stainless Steel
9	8		End cap screw SR	Stainless Steel
10	8		End cap screw washer	Stainless Steel
11	2	1	O-ring end cap	Nitrile rubber
12	2		Warning sticker DA	Polyester
13	2		Warning sticker SR	Polyester
14	2		Piston	Cast Aluminium alloy
15	2	1	Bearing piston	PTFE 25% carbon-filled
16	2	1	O-ring piston	Nitrile rubber
17	2	1	Bearing strip piston rack	POM
18	2		Pinion	High grade aluminium
19	2	1	Bearing pinion	POM
21	2	1	O-ring pinion	Nitrile rubber
23	1	1	Thrust bearing pinion	POM, black UV stabilized
26	1		Indicator assembly	ABS + stainless steel screw
27	1	1	Circlip	Spring steel
28	1		Drive insert	Aluminium
30	2		Limit stop screw	Stainless steel
31	2		Limit stop nut	Stainless steel
32	2	1	Limit stop washer	PA66
33	2	1	O-ring limit stop	Nitrile rubber

Notes:
1 Included in Service Kit.
2 Actuator sizes 25 to 100 have high end caps for double-acting and spring-return models. Actuator sizes 150 to 4000 have low end caps for double-acting models and high end caps for spring-return models.

11.2 Actuator sizes RPE950 to RPE2500

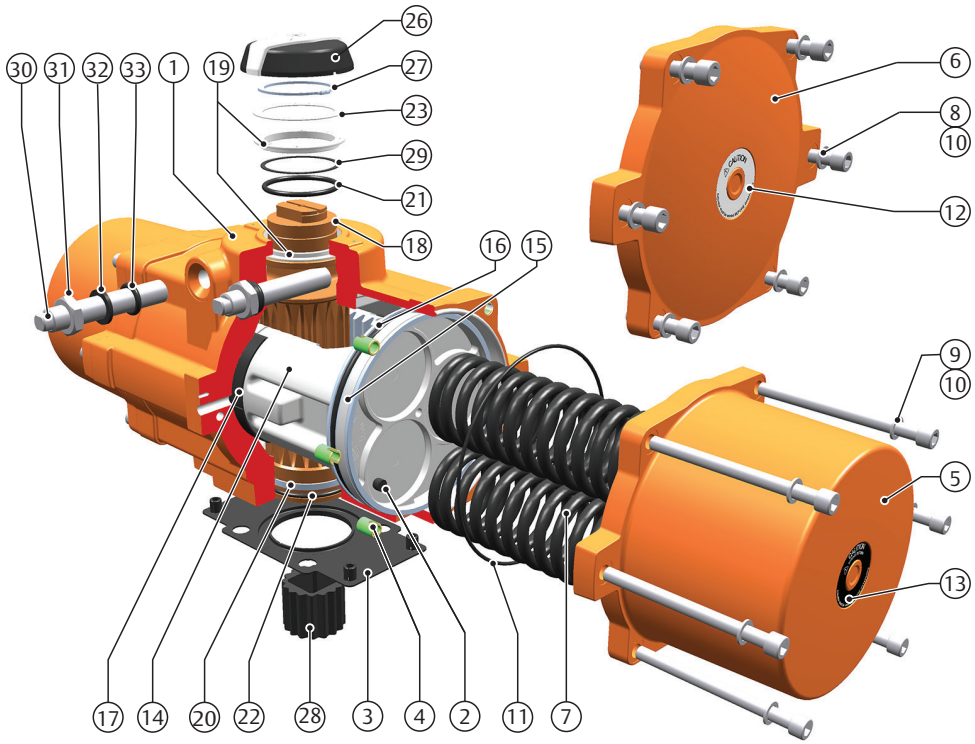

Table 17. Parts List

Pos.	Qty.	Notes	Description	Material
1	1		House	Cast Aluminium alloy
2	2	1	B-port seal	Nitrile rubber
3	1		Center plate (option)	Nylon PA6, Black
4	12		Thread insert	Steel
5	2		End cap SR	Cast Aluminium alloy
6	2		End cap DA	Cast Aluminium alloy
7	Max. 6		Springs	Spring steel
8	12		End cap screw DA	Stainless Steel
9	12		End cap screw SR	Stainless Steel
10	12		End cap screw washer	Stainless Steel
11	2	1	O-ring end cap	Nitrile rubber
12	2		Warning sticker DA	Polyester
13	2		Warning sticker SR	Polyester
14	2		Piston	Cast Aluminium alloy
15	2	1	Bearing piston	PTFE 25% carbon-filled
16	2	1	O-ring piston	Nitrile rubber
17	2	1	Bearing strip piston rack	POM
18	1		Pinion	High grade aluminium
19	2	1	Bearing pinion top	POM
20	1	1	Bearing pinion bottom	POM
21	1	1	O-ring pinion top	Nitrile rubber
22	1	1	O-ring pinion bottom	Nitrile rubber
23	1	1	Thrust bearing pinion	POM, black UV stabilized
26	1		Indicator assembly	ABS + stainless steel screw
27	1	1	Circlip	Spring steel
28	1		Drive insert	Aluminium
29	1	1	Backup ring	POM
30	2		Limit stop screw	Stainless steel
31	2		Limit stop nut	Stainless steel
32	2	1	Limit stop washer	PA66
33	2	1	O-ring limit stop	Nitrile rubber

Notes:

1 Included in Service Kit.

11.3 Actuator size RPE4000

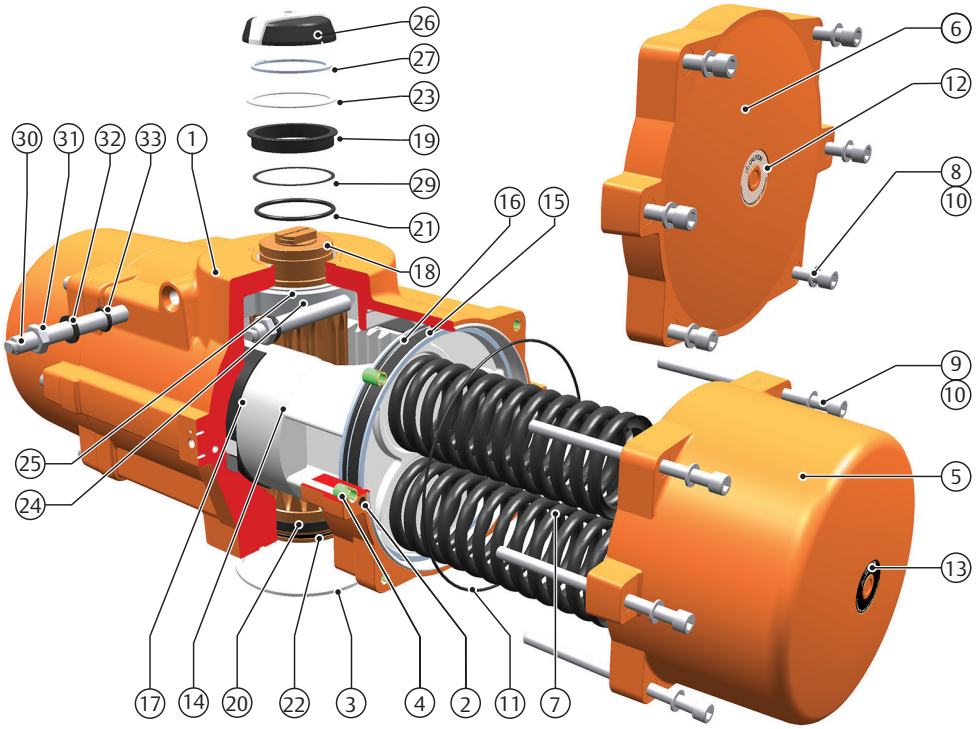

Table 18. Parts List

Pos.	Qty.	Notes	Description	Material
1	1		House	Cast Aluminium alloy
2	2	1	B-port seal	Nitrile rubber
3	1		Center ring (option)	Stainless Steel AISI 304
4	12		Thread insert	Steel
5	2		End cap SR	Cast Aluminium alloy
6	2		End cap DA	Cast Aluminium alloy
7	Max. 6		Springs	Spring steel
8	12		End cap screw DA	Stainless Steel
9	12		End cap screw SR	Stainless Steel
10	12		End cap screw washer	Stainless Steel
11	2	1	O-ring end cap	Nitrile rubber
12	2		Warning sticker DA	Polyester
13	2		Warning sticker SR	Polyester
14	2		Piston assembly	Cast Aluminium alloy
15	2	1	Bearing piston	PTFE 25% carbon-filled
16	2	1	O-ring piston	Nitrile rubber
17	2	1	Bearing strip piston rack	POM
18	1		Pinion	High grade aluminium
19	2	1	Bearing pinion top	POM
20	1	1	Bearing pinion bottom	POM
21	1	1	O-ring pinion top	Nitrile rubber
22	1	1	O-ring pinion bottom	Nitrile rubber
23	1	1	Thrust washer pinion	POM, black UV stabilized
24	1		Cam stroke adjustment	Steel
25	1	1	Cam thrust washer	POM, black UV stabilized
26	1		Indicator assembly	ABS + stainless steel screw
27	1	1	Circlip	Spring steel
29	1	1	Backup ring	POM
30	2		Limit stop screw	Stainless steel
31	2		Limit stop nut	Stainless steel
32	2	1	Limit stop washer	PA66
33	2	1	O-ring limit stop	Nitrile rubber

Notes:
1 Included in Service Kit.

Appendix A: Spring Load Removal

This section explains:

- How to remove the spring load safely of spring-return actuators in case:
  - The valve gets “stuck” in mid position.
  - One of the spring cartridges is broken.

⚠ WARNING: MOVING PARTS

A Spring-return actuator mounted on a valve, which is stuck in mid stroke, contains a high spring load which will cause a sudden rotation of the actuator versus the valve during disassembly. This can cause serious injury to personnel or damage to material.

On Spring-return actuators with a broken spring cartridge, the end cap can be “shot” away during disassembly of the actuator. This can cause serious injury to personnel or damage to material.

A.1 Spring load relief

⚠ CAUTION: ROTATING ACTUATOR

In case of an actuator/valve assembly “stuck” in mid position, leave the actuator on the valve and/or mounting bracket during this procedure.

Figure A-1 Spring load removal

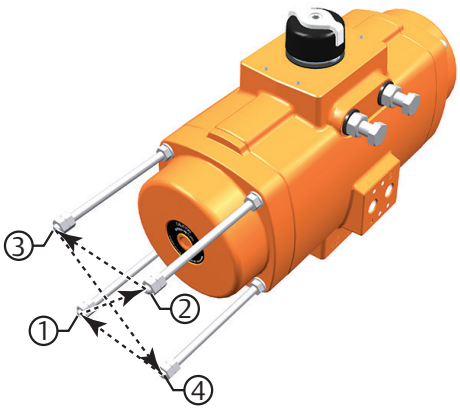

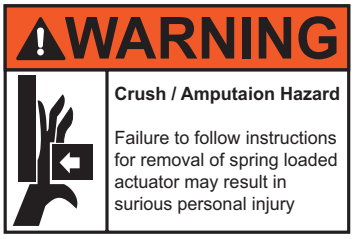

1. Depressurize the actuator completely.
2. Based on the actuator size, choose the correct threaded rod kit from Table A-1.
3. Replace one by one each end cap screw for the threaded rod kit and turn down the adjusting nut until it touches the end cap.
4. Once all for end cap screws have been replaced, gradually turn the adjustment nuts on threaded rod in CCW direction by turning the nuts half turn at a time. Make sure the rod itself does not turn. Continue this until the load of springs are relieved.
5. Repeat the same procedure for the end cap screws on the other size of the actuator as shown in figure A-1.
6. In case of an actuator/valve assembly “stuck” in mid position: The actuator now can be disassembled from Valve, by removing the mounting studs / bolts.

Table A-1. Threaded rod dimensions in mm

Actuator size	Thread	Threaded rod length	
		(mm)	(inch)
25	M5	140	5.5
40	M5	140	5.5
65	M5	140	5.5
100	M5	140	5.5
150	M6	145	5.7
200	M6	145	5.7
350	M8	185	7.3
600	M10	185	7.3
950	M12	498	19.6
1600	M12	498	19.6
2500	M12	498	19.6
4000	M14	600	23.6

Figure A-2 Spring load removal rod dimensions

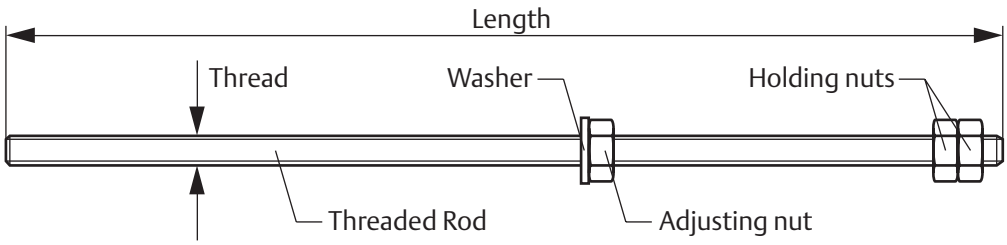

Appendix B: Tool & Torque Table

This section explains:

- Which tools to use for the indicated fasteners.
- The recommended amount of torque to apply on the indicated fasteners.

Table B-1. End cap bolts

Actuator size	Thread	Tool	Size	Torque (Nm)			Torque (lbf.ft)		
				Target	Min.	Max.	Target	Min.	Max.
25	M5	Allen key	SW 4	2.0	1.6	3.0	1.5	1.2	2.2
40	M5		SW 4	2.0	1.6	3.0	1.5	1.2	2.2
65	M5		SW 4	2.0	1.6	3.0	1.5	1.2	2.2
100	M5		SW 4	2.0	1.6	3.0	1.5	1.2	2.2
150	M6		SW 5	3.3	2.6	5.1	2.4	1.9	3.8
200	M6		SW 5	3.3	2.6	5.1	2.4	1.9	3.8
350	M8		SW 6	8.4	6.7	12.2	6.2	4.9	9.0
600	M10		SW 8	15.3	12.2	24.8	11.3	9.0	18.3
950	M12		SW10	24.3	19.4	41.6	17.9	14.3	30.7
1600	M12		SW10	24.3	19.4	41.6	17.9	14.3	30.7
2500	M12		SW10	24.3	19.4	41.6	17.9	14.3	30.7
4000	M14		SW12	43.5	34.8	66.4	32.1	25.7	49.0

Table B-2. Bottom Flange

Actuator size	ISO Pattern	Metric Thread	Torque (Nm) Min.	Torque (Nm) Max.	Imperial Thread	Torque (lbf.ft) Min.	Torque (lbf.ft) Max.
25	F03 inner pattern	M5	2.0	3.0	10-24UNC	1.5	2.2
	F05 outer pattern	M6	4.5	5.0	1/4"-20	3.3	3.7
40, 65, 100	F05 inner pattern	M6	4.5	5.0	1/4"-20	3.3	3.7
	F07 outer pattern	M8	10.5	12.5	5/16"-18	7.7	9.2
150, 200, 350	F07 inner pattern	M8	10.5	12.5	5/16"-18	7.7	9.2
	F10 outer pattern	M10	21.0	24.5	3/8"-16	15.5	18.1
600	F10 inner pattern	M10	21.0	24.5	3/8"-16	15.5	18.1
	F12 outer pattern	M12	34.5	43.0	1/2"-13	25.4	31.7
950	F10 inner pattern	M10	21.0	24.5	3/8"-16	15.5	18.1
	F14 outer pattern	M16	90.0	104.0	5/8"-11	66.4	76.7
1600, 2500	F16 inner pattern	M20	170.0	204.0	3/4"-10	125.4	150.5
	F25* outer pattern	4x M16	90.0	104.0	4x 5/8"-11	66.4	76.7
4000	F16 inner pattern	M20	170.0	204.0	3/4"-10	125.4	150.5
	F25 outer pattern	8x M16	90.0	104.0	8x 5/8"-11	66.4	76.7

1. For actuator sizes 1600 and 2500 only 4 holes of the ISO5211 F25 drilling pattern are available.

Table B-3. NAMUR (VDE/VDI 3845) flanges

Flange	Metric Thread	Torque (Nm) Min.	Torque (Nm) Max.	Imperial Thread	Torque (lbf.ft) Min.	Torque (lbf.ft) Max.
Solenoid flange screw threads	M5	2.0	3.0	10-24UNC	1.5	2.2
Top flange screw threads	M5	2.0	3.0	10-24UNC	1.5	2.2

Table B-4. Limit stop screws and nuts

Actuator size	Thread	Bolt Wrench size (mm)	Nut wrench size (mm)
25	M 6	10	10
40	M 8	13	13
65	M 10	17 (16)[1]	17 (16)[1]
100	M 10	17 (16)[1]	17 (16)[1]
150	M 10	17 (16)[1]	17 (16)[1]
200	M 12	19 (18)[1]	19 (18)[1]
350	M 16	24	24
600	M 20	30	30
950	M 22	12	32
1600	M 24	14	36
2500	M 27	17	41
4000	M 22	12	32

1. Default dimension according DIN933 standard.
2. Dimensions in brackets according ISO4017 standard.

Table B-5. Recommended circlip pliers according DIN 5254 (or equal) for shaft circlips

Actuator size	Pinion top diameter		Pliers according DIN	Actuator size	Pinion top diameter		Pliers according DIN
25 - 100	22 mm	0.866"	A2	1600	75 mm	2.953"	A3
150 - 350	36 mm	1.417"	A3	2500	95 mm	3.74"	A4
600	55 mm	2.165"	A3	4000	96 mm	3.78"	A4
950	65 mm	2.559"	A3				

Table B-6. Angular Displacement Limit Stops

Actuator size	Turns for 5° adjustment of the pinion:	360° revolution of limit stop screw will adjust
25	0.7	7.1°
40	0.8	6.3°
65	0.6	8.3°
100	0.7	7.1°
150	1.2	4.2°
200	1	5.0°
350	0.8	6.3°
600	0.8	6.3°
950	1.1	4.7°
1600	1.3	4.1°
2500	1.5	3.4°
4000	3.2	1.6°

Appendix C: Full Stroke Adjustment Option

This section explains:

- How to mount the Full Stroke Adjustment option to an actuator
- How to adjust the Full Stroke Adjustment option to a required rotation angle.

C.1 Full Stroke Adjustment Option

The Full Stroke Adjustment option is available as a complete actuator or as an end cap conversion kit in order to upgrade a standard actuator into a Full Stroke Ajdustment version.

The option is available for sizes 25 to 600 and both the double acting kit and spring return kit use the spring return end cap.

Figure C-25 Availability formats of the full Stroke Adjustment option

C.2 Convert a Standard Actuator into a Full Stroke Adjustment Version

Before starting to assemble the Full Stroke adjustment kit, please check the kit for completeness. See figure C-2.

Figure C-26 Full Stroke adjustment kit content

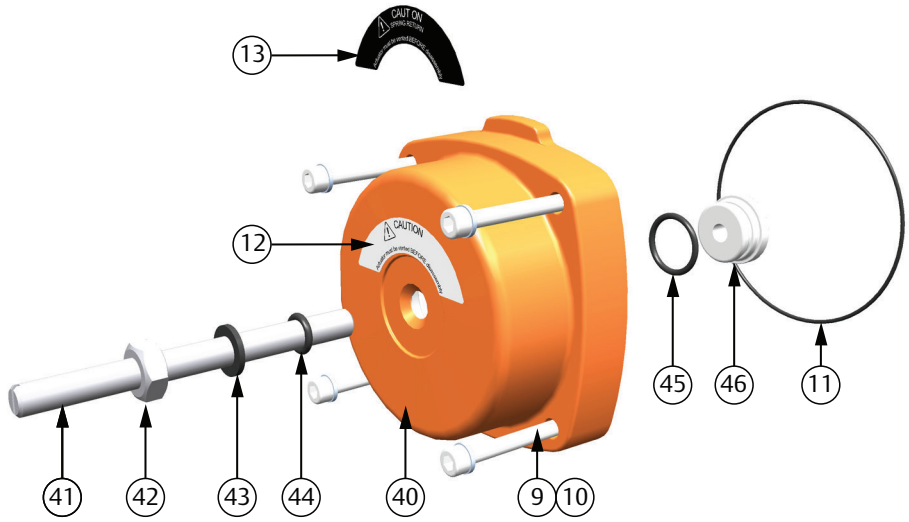

Table C-7 Content Full Stroke Adjustment Kit

Pos.	Description	Material	Qty.	Notes
40	End cap - Full stroke adjustment	Cast Aluminium alloy	2	1
41	Full Stroke adjustment screw	Stainless steel	2	
42	Full Stroke adjustment Nut	Stainless steel	2	
43	Full Stroke adjustment washer	PA66	2	
44	O-Ring - Full Stroke adjustment screw	Nitrile rubber	2	
45	O-Ring - Thread bush	Nitrile rubber	2	
46	Thread bush	Aluminium	2	
9	End cap screw	Stainless steel	8	
10	Washer end cap screw	Stainless steel	8	
11	O-ring end cap	Nitrile rubber	2	
12	Warning sticker DA Full Stroke adjustment	Polyester	2	
13	Warning sticker SR Full Stroke adjustment	Polyester	2	

1. The same Full Stroke adjustment end cap is used for both double acting and spring return actuators (flat double acting actuator end caps with Full Stroke Adjustoment options are not available).

C.2.1 Procedure

1. Remove the existing end caps of a standard actuator.
   - Follow the instructions of Section 8 to remove both the end caps of the actuator.
   - For spring return actuators; note the original positions of the spring cartridges.
2. Mount the Full Stroke Adjustment End cap kit to the actuator.
3. Grease the O-ring seals (11) according to section 9.1.
4. Ensure that O-ring seals (11) are kept in place during assembly.
5. For spring return actuators; place the spring cartridges (7) back in their original positions.
6. Install the Full Stroke end cap kits and tighten the end cap screws (9,10). For spring return units; tighten each endap screw (9,10) in small equal turns and in the sequence as per Figure C-3. Refer to Appendix B, Table B-1 for the correct torque.
7. For Spring Return units, place the black warning sticker (13) on the end cap. For Double Acting units, place the white warning sticker (12) on the end cap.

Figure C-27 Assembly of Full Stroke adjustment end cap kit

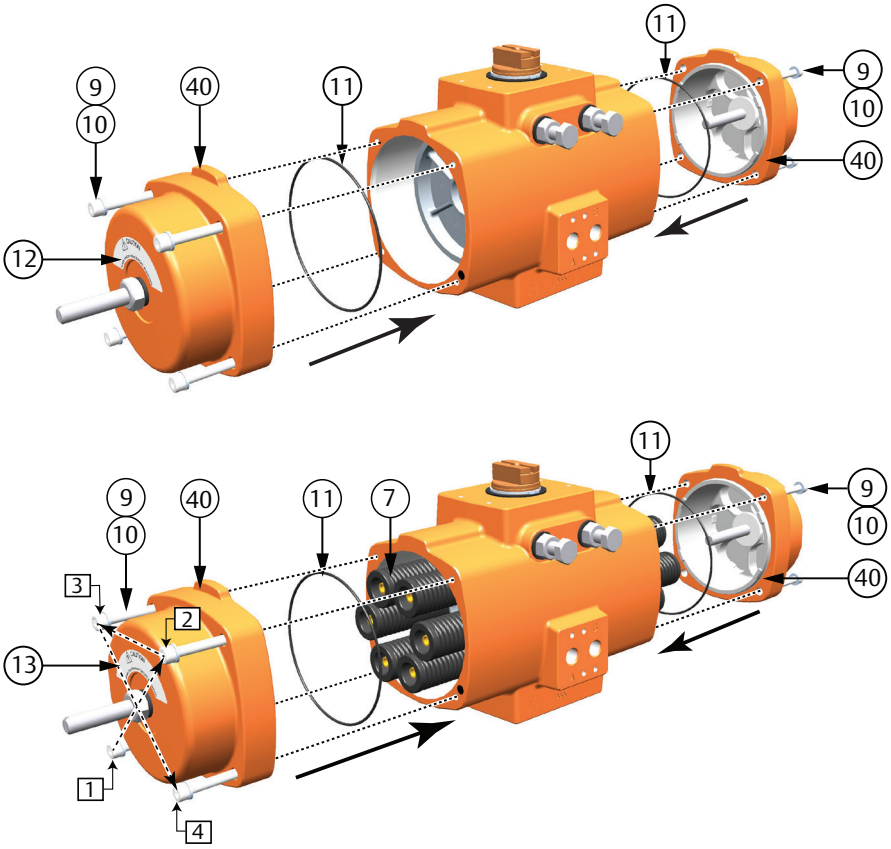

C.3 Full Stroke Adjustment Setting

Note:
Standard actuators or actuators with the Full Stroke Adjustment option are shipped by default with a rotation setting of 90° +/-0.5°.

The stroke adjustment setting procedure can be two steps:

1. Setting the Full Stroke Adjustment screw to the 90° (factory) positon.
   - This step is applicable if a standard actuator is converted with a Full Stroke Adjustment end cap kit or if the position of the Full Stroke Adjustment screw is somehow lost.
2. Setting the Full Stroke Adjustment screw to the required angle.

C.3.1 Factory Setting Procedure

1. In order to set the Full Stroke Adjustment Screws accurately to the outward position:
   - Do not change the setting of the DSA limit stop screws (A and B) located above the air connection interface.
   - Move the pistons of the actuator outwards by applying pressure to the A-port.
2. Screw in both the Full Stroke Adjustment Screws (41) until the screws touch the pistons. You will feel an obstruction.
   Important: Do not overtighten the screws.

Figure C-28 DSA limit stop screw setting

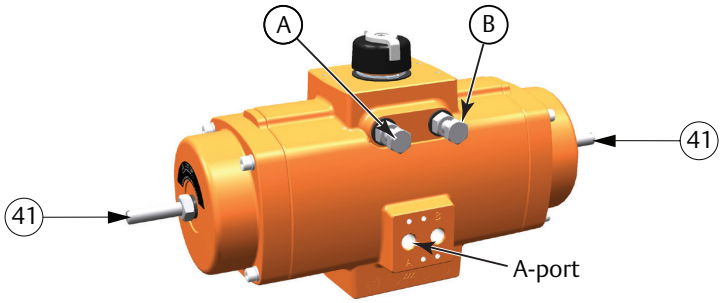

You have now set the adjustment screw to the factory setting

Notes:

1. Only the outward stroke can be adjusted with the Full Stroke Adjustment screws.
   - In case of assembly code CW, the left side limit stop (A) is redundant.
   - In case of assembly code CC, the right side limit stop (B) is redundant.
2. For the inward stroke the standard limit stops can be used:
   - The right side limit stop (B) for assembly code CW
   - The left side limit stop (A) for assembly code CC

C.3.2 Setting the Full Stroke Adjustment Screw to the Required Angle

1. Move the pistons of the actuator inwards.
   - For Spring Return actuators this happens automatically when the actuator is vented.
   - For double acting actuators vent the A-port and apply pressure to the B-port.
2. In order to set the actuator to the required angle, use next table to define the number of revolutions which you have to turn in the Full Stroke Adjustment Screws.
3. Turn in both the adjustment screws (41) as defined in step 2. Both the adjustment screws should be turned in with the same length or number of revolutions.

⚠ CAUTION: DO NOT SET SCREWS UN-EQUAL

Screwing in only one adjustment screw or un-equal setting of both the screws will lead to high point loads on the pistons and can cause premature failure of the actuator.

4. Test cycle the actuator to check if the correct rotation angle is set. If required, repeat steps 1 to 3 to adjust the rotation angle to the required angle.

Table C-8 Actuator angle rotation per full revolution of Full Stroke adjustment screw

Actuator size	Stroke		Flathead screw driver	Screw		Actuator angle rotation per full revolution of screw
	mm	inch		Thread	Pitch (mm)	
25	15.7	0.62	1.0 x 5.5	M6	1	5.7°
40	18.8	0.74	1.2 x 6.5	M8	1.25	6.0°
65	22.0	0.87	1.2 x 6.5	M8	1.25	5.1°
100	25.1	0.99	1.2 x 6.5	M10	1.5	5.4°
150	31.4	1.24	1.2 x 6.5	M10	1.5	4.3°
200	37.7	1.48	1.2 x 6.5	M10	1.5	3.6°
350	37.7	1.48	1.2 x 6.5	M12	1.75	4.2°
600	44.0	1.73	1.2 x 6.5	M16	2	4.1°

World Area Configuration Centers (WACC) offer sales support, service, inventory and commissioning to our global customers.
Choose the WACC or sales office nearest you:

NORTH & SOUTH AMERICA

19200 Northwest Freeway
Houston TX 77065
USA
T +1 281 477 4100

Av. Hollingsworth
325 Iporanga Sorocaba
SP 18087-105
Brazil
T +55 15 3413 8888

ASIA PACIFIC

No. 9 Gul Road
#01-02 Singapore 629361
T +65 6777 8211

No. 1 Lai Yuan Road
Wuqing Development Area
Tianjin 301700
P. R. China
T +86 22 8212 3300

MIDDLE EAST & AFRICA

P. O. Box 17033
Jebel Ali Free Zone
Dubai
T +971 4 811 8100

P. O. Box 10305
Jubail 31961
Saudi Arabia
T +966 3 340 8650

24 Angus Crescent
Longmeadow Business Estate East
P.O. Box 6908 Greenstone
1616 Modderfontein Extension 5
South Africa
T +27 11 451 3700

EUROPE

Holland Fasor 6
Székesfehérvár 8000
Hungary
T +36 22 53 09 50

Strada Biffi 165
29017 Fiorenzuola d'Arda (PC)
Italy
T +39 0523 944 411

For complete list of sales and manufacturing sites, please visit
www.emerson.com/actuationtechnologieslocations or contact us at
info.actuationtechnologies@emerson.com

www.emerson.com/bettis

©2019 Emerson. All rights reserved.

The Emerson logo is a trademark and service mark of Emerson Electric Co.
Bettis™ is a mark of one of the Emerson family of companies.
All other marks are property of their respective owners.

The contents of this publication are presented for information purposes only, and while every effort has been made to ensure their accuracy, they are not to be construed as warranties or guarantees, express or implied, regarding the products or services described herein or their use or applicability. All sales are governed by our terms and conditions, which are available on request. We reserve the right to modify or improve the designs or specifications of our products at any time without notice.

BETTIS™

EMERSON™